# HANDBOOK

OF

# The Austin Seven

PRICE - ONE SHILLING

715 B

THE
AUSTIN MOTOR CO. LTD.
LONGBRIDGE :: BIRMINGHAM

# HANDBOOK

OF

# The Austin Seven



## PRICE - ONE SHILLING

22nd EDITION.


**THE AUSTIN MOTOR CO. LTD.**
**LONGBRIDGE - BIRMINGHAM**

*Telephones* - - CENTRAL 4140-3. PRIORY 2101-2116
*Telegrams:* "SPEEDILY, NORTHFIELD." *Code:* BENTLEY'S

LONDON SHOWROOMS, REPAIR DEPÔT AND HIRE DEPT.:
479—483, Oxford Street, W.1

*Telephone:* MAYFAIR 7620 to 7639.
*Telegrams:* "AUSTINETTE, LONDON."

AND

HOLLAND PARK HALL
HOLLAND PARK AVENUE, W.11

*In reference to this book please quote the number* **715B**

# *A Foreword.*

THE information contained in this Handbook is intended only to guide and assist owners or drivers of Austin cars to preserve the car in its proper satisfactory running condition. This publication must not be considered as a complete manual. The handbook does not in any manner vary or extend the liability of the Company, which is limited to the Warranty issued with the car. Where no information is given for a particular adjustment, it may be regarded as one which the average owner would entrust to a garage. When the occasion for adjustments of this character arises, the owner should seek the aid of the local Austin agent, whose address will be found in the list of agents supplied with the car. Both owner and agent are encouraged to call upon the Service Department of the Company for advice, whether upon the management of the car, the effecting of adjustment, or methods of repair. Owners need not suppose that they will have to apply all the attentions given in this book, but careful notice should be taken of the chapters dealing with maintenance.

Two additional publications give lists and illustrations of all the parts, and their prices, respectively, and the owner should find these books helpful for reference.

Many of the adjustments and attentions described in the following pages are included in the "Schedule of Charges for Repairs." The Company is confident that owners will find it to their own benefit to make the fullest use of this standard price repair and maintenance service, which it is a function of all Austin Agents to offer.

**IMPORTANT.—See special note at end of book, with reference to accessories and equipment not manufactured by the Austin Motor Co., Ltd.**

*January*, 1931.



# CONTENTS


| | Page |
|---|---|
| AMMETER READINGS | 36 |
| ATTENTIONS, Daily | 11 |
| ,, Weekly | 11 |
| ,, Monthly | 12 |
| ,, Occasional | 12 |
| BATTERY, The | 37 |
| BODYWORK, Care of | 51 |
| BRAKES, Adjusting the | 42-45 |
| BRAKE GEAR, Lubrication of | 28 |
| BRAKES, Re-lining | 44-45 |
| CAR, Control of the | 9 |
| ,, Features of the | 6 |
| ,, The New | 7-8 |
| CARBURETTER, The | 14-18 |
| ,, ,, Adjustment of | 14 |
| ,, ,, Slow Running Device | 16 |
| ,, ,, Leakage from | 17 |
| CLUTCH, Lubrication of Mechanism | 27 |
| COMBUSTION CHAMBER, Cleaning | 40-41 |
| COOLING SYSTEM | 23 |
| DYNAMO, The | 35 |
| ELECTRICAL EQUIPMENT, The | 35-39 |
| ENGINE, Lubrication of | 25-27 |
| ,, Starting the | 7 |
| FAN | 29, 48 |
| FRONT AXLE, Lubrication of | 29 |
| FUSE, Action of the | 37 |
| GEARBOX, Lubrication of | 27 |
| GREASE GUN, How to use the | 24 |
| HUBS (Front and Rear) Lubrication of | 30 |
| IGNITION, Timing | 21 |
| ,, System, The | 19-22 |
| LAMPS, Care of | 34 |
| LUBRICATION CHART | 31 |
| LUBRICANTS, Choice of | 25 |
| REAR AXLE, Lubrication of | 28 |
| ROAD SPRINGS, Lubrication of | 29 |
| RUNNING ADJUSTMENTS | 40-43 |
| SHOCK ABSORBERS, Adjustment of | 47 |
| SPORTS ENGINE, Maintenance Instructions | 32-33 |
| STEERING, Adjustment of | 46-47 |
| STEERING GEAR, Lubrication of | 28 |
| TOOLS, Supplied | 53 |
| TYRES, The | 52 |
| UNIVERSAL JOINT, Lubrication of | 28 |
| VALVE TAPPETS, Adjustment of | 40 |
| WHEEL, Changing a | 10 |
| WIRING, Illustration of | 39 |

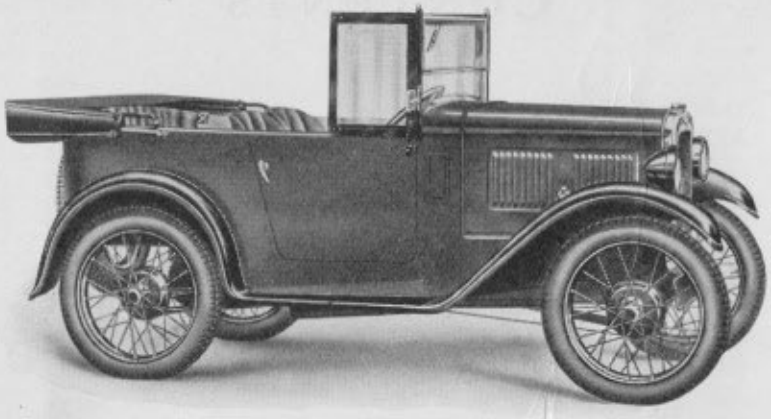

The Austin Seven Tourer.

# The AUSTIN SEVEN

THE Austin Seven is acknowledged to be the best small car in the world.

It is designed for, and will carry in comfort, four adults up to a weight of 40 stones.

There are five models made, the Tourer, the Metal Saloon, the Fabric Saloon, the Two-Seater, and the Sports Model. The Tourer, with its easily operated hood, and side curtains that open with the doors, provides complete protection in even the most inclement weather. The closed models are alike in general lines and equipment. Particularly good features are the wide doors with one-piece windows, which are mechanically raised or lowered. The large single panel windscreen, that can be opened wide, and secured by an ingenious lever fastening, easily reached from the driver's seat, is another advantage. Their names accurately describe the two-seater and sports models.

Except on the two-seater and sports models, both front seats tilt forward and allow ready access to the rear seats or luggage space.

It has a 4-cylinder, water-cooled engine, three-speed gear-box, and bevel drive through the differential. Lubrication is by pump, and cooling is on the thermo-syphon system and by fan.

The complete equipment includes electric hand starting and lighting switches, air strangler, electric horn, speedometer, automatic windscreen wiper, license holder, shock absorbers, spare wheel and tyre and blank number plates. All external fittings are chromium plated.



The hand lever and pedal each apply brakes to all four wheels which carry 26 × 3.50 in. (3.50—19) Dunlop balloon reinforced cord tyres.

The Austin Seven is particularly suitable for the woman driver. It requires little physical effort to drive and control, and for that reason its use enables her to do shopping calls without fatigue, visit her friends, attend social and other functions, or make excursions or trips in any direction in any weather. For the same reasons business men find it an excellent vehicle, and commercial travellers and others whose occupation compels frequent calls over an extended area, have in the little car an embodiment of all they require. Calls can be made in places where trains, trams and 'buses are infrequent.

In large establishments where the instant use of a car is of vital importance in cases of emergency, such as sudden illness or accident, the Seven has been installed as a "tender," and in addition to its superiority over large unweildy cars for short runs, has proved a real time and money saver.

As 45 to 50 miles per gallon is the average petrol consumption, the cost of transit is below the cost of fares on any public conveyance, and in this particular the Austin Seven has no rival.

Its speed, economy, reliability and road-holding qualities have been admitted beyond dispute.

Thousands of motorists have had their first experiences on a "Seven," thousands more will follow them.

Having successfully passed through years of severe use and trial, it has emerged a really successful and popular favourite; and its splendid qualities are internationally recognized.

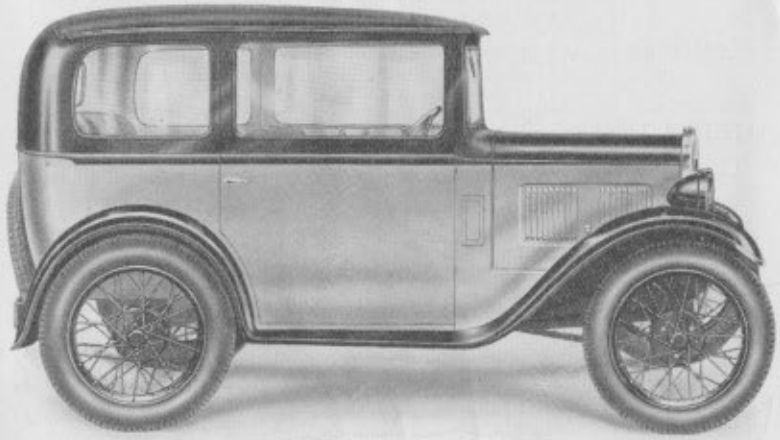

The Austin Seven Saloon.

## ITS LEADING FEATURES

| | |
|---|---|
| DIMENSIONS | Full car length, 9 ft. 6 in. (2,896 mm.); Full car width (over door handles) 4 ft. 2in. (1,270 mm.); Wheelbase, 6 ft. 3 in. (1,905 mm.) Track, 3 ft. 4 in. (1,016 mm.); Weight, approx. 8½ cwt. (425 kg.). Ground clearance 8¾ in. (220 mm.). |
| ENGINE | Four-cylinder, water-cooled, detachable head. Bore, 2.2 in. (56 mm.) / Stroke, 3 in. (76 mm.) } 747.5 c.c., R.A.C. rating, 7. h.p. Brake horse-power: 10.5 at 2,400 rev. Ignition: Coil. Oil circulation: by pump. Cooling: Thermo-syphon with film radiator and fan. Roller crankshaft bearings. |
| STARTER | Electrical. |
| CLUTCH | Single-plate. |
| GEARBOX | Three speeds forward, and reverse; ratios: 4.9 to 1, 9 to 1, and 16 to 1; reverse, 21 to 1; Ball bearings throughout. |
| REAR AXLE | ¾-floating, with differential and torque tube. Ball bearings and thrusts throughout. Final drive by shaft and helical bevel. |
| SPRINGS | ½-elliptic cross spring in front. Quarter elliptics at rear. Shock absorbers are fitted to front and rear. |
| STEERING | Worm and wheel, having provision for taking up wear |
| FRONT AXLE | Forged, I section. |
| BRAKES | On all four wheels: easily adjustable. Both hand and foot brakes operate on all four wheels. |
| WHEELS | Special wire detachable, fitted with 26in. × 3.50 in. (3.50—19) Dunlop balloon reinforced cord tyres. One spare wheel with tyre. |
| CONTROLS | Ball change speed gear lever and brake lever, mounted centrally. Gas and ignition control levers mounted on the steering wheel. Foot accelerator is also provided. |
| PETROL TANK | 5 gallons. A two-level tap provides 1 gallon reserve. |
| LIGHTING | By gear-driven dynamo, with accumulators and dimmer. |
| BODYWORK | Two bucket seats for driver and passenger, both being hinged to allow easy entrance to the rear seat. Rear seat to carry two adults or three children. Ample tool accommodation under seats. Spare wheel and tyre carried on back of car. On touring model, hood, double screen, and full side screens (those over the doors open with them). Electric horn, and speedometer, automatic windscreen wiper, driving mirror and license hilder. |
| WORKMANSHIP AND MATERIALS | Austin quality. |
| INSURANCE | Special Insurance has been aranged at £8 18s. 9d. per annum, except for cars garaged within 10 miles of towns with a population exceeding 250,000 for which cars the annual premium is £11 3s. 9d. |



# The NEW CAR

ON taking possession of a new car it is advisable to give it a general examination to see that all is complete and in order.

Make sure that the tool-kit is complete, check it over according to the list given on page 53.

If you are not already familiar with Austin cars, we strongly recommend that this handbook be carefully studied.

Before running see that the car is supplied with fuel and water and that the engine and gearbox have the necessary quantities of oil. The battery should contain the required amount of acid. For quantities of oil and acid see sections "Lubrication" and "Electrical Equipment."

Should the car be delivered by road it will be ready for running but if it has been transported by rail or overseas, the engine may have become stiff through the gumming of the oil on the pistons. They may be freed by the injection of a little petrol into the cylinders. Remove the sparking plugs, pour in about a thimble full of petrol, wait a minute while it percolates, replace the sparking plug and then turn the engine a few revolutions with the starting handle.

When a car is crated for dispatch overseas, water, fuel, and oil are removed and the battery left empty and uncharged.

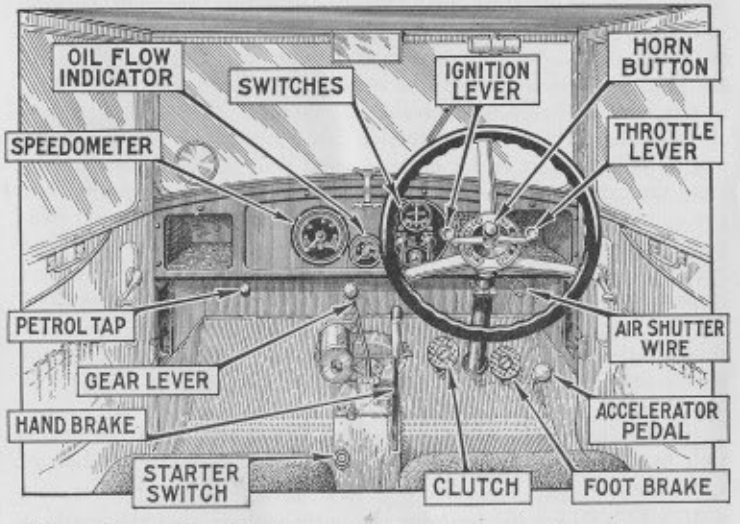


## Starting the Engine

Make sure that the change speed lever is in neutral position and the hand brake on.

Turn on petrol tap at the bottom of the petrol tank (this will be found under the bonnet).

Set the engine control levers at the top of the steering wheel—Gas—open about ⅛ in. Ignition—almost fully advanced.

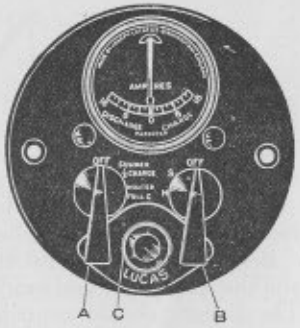


Give the engine a few turns with the starting handle to make sure that the crankshaft is free (pushing the handle in to engage fully with the starting nut, before turning it), then switch on, turning the left-hand switch to "Summer ½ Charge" or "Winter Full C." Pull out the wire on the instrument board to close the carburetter air inlet, and again give the crankshaft a few sharp turns by means of the starting handle, making sure to pull the handle upwards to commence with; or firmly press the starter switch. *Be sure to release the air shutter wire after the engine has started.* Do not try to start the engine when cold by the electric starter, nor allow the engine to race when first starting up, as time must be allowed for the oil to circulate and lubricate various bearings.

Never leave the ignition switch on for any lengthy period while the engine is not running. The warning lamp on the switch board will remind you of this.

## Difficulty in Starting

Difficulty in starting may be caused either through sucking too much petrol into the cylinders, or too little. When starting with the throttle all but closed, a strong suction takes effect on the pilot jet, and it may not be necessary to flood the carburetter; in any case it should only be flooded slightly. If petrol is passing through the carburetter the suction can generally be heard. If the engine fails to start and there is a good deal of petrol overflowing from the carburetter it is almost certain that the mixture getting into the cylinder is too rich. The throttle should then be opened half-way to reduce the suction. On firing, the engine will race away, and the throttle should be almost closed. If the engine does not fire close the throttle entirely, and try again. After a stop in hot weather, failure of the engine to start is more likely to be due to too rich a mixture than one too lean, and one should stop the engine by the switch only after quite closing the throttle. Re-start the engine with the throttle closed.

If after the foregoing measures have been carried out the engine fails to start, the reason will probably be due to faulty ignition or carburation.

IGNITION: First examine the wires and see that the sparking plugs are connected. Then test the gap of the plug points by means of the thick end of the gauge provided in the tool kit. If the points are dirty, clean them before replacing the plug.

CARBURATION: The slow running jet may be stopped up or a main jet choked. Blow them out with a tyre pump.

**The engine should never be allowed to run at high speeds for the first 300 miles.**



# CONTROL OF THE CAR

## Setting of Control Levers

AFTER having started the engine, keep the ignition lever in the advanced position; should the engine commence to "rumble" or run roughly, retard the lever, but advance it again as soon as the load on the engine is lessened. The "gas" lever should be set generally for slow running and the speed of the car controlled by the accelerator pedal.

## Changing Gear

Double declutching will be found the best method of gear changing on the Austin Seven and should be adopted straight away. Also when changing up the foot should be taken off the accelerator pedal, and when changing to a lower gear it should be held down. The car should be well accelerated on each speed when changing up, and a deliberate pause should be made with the gear lever in neutral position and with the clutch in whether changing up or down.

Always change gear early on a hill; never allow the engine to labour in any gear and expect it to pick up speed on changing into a lower one when the car has nearly stopped.

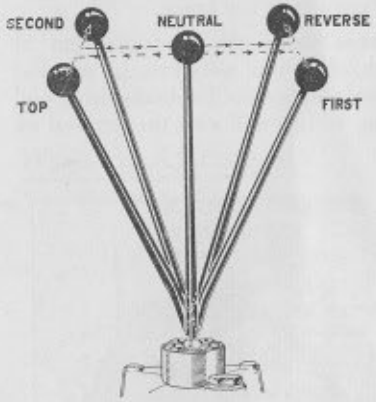


Keep the foot off the clutch pedal except in heavy traffic. Even then, do not allow the weight of the foot to be taken by the pedal. The slipping of the clutch caused by this practice heats and wears it badly.

When descending a long hill, or *before* commencing a steep descent, engage one of the lower gears, and keep the throttle closed. The engine will then help to retard the speed of the car When using the brake, keep the clutch in, disengaging it at the last moment if stopping the car.

The driving seat of the Austin Seven is adjustable for position and this convenience should be taken advantage of so as to obtain the greatest comfort.

# Changing a Wheel

## The Spare Wheel

WHEN it becomes necessary to change a wheel because of a puncture or for any other cause, the spare wheel must be lifted from its bracket at the rear of the car, to which it is fastened by three wheel nuts, in the same way as the wheels are attached to the hub.

It is important to have the car on level ground. With the wheel brace the three nuts (A) of the wheel to be removed should be slightly slackened, but only enough for them to unscrew freely later. The wheel is then jacked up. If it is a rear wheel, the jack should be placed under the rear spring anchorage on the axle (or if the car is unavoidably on uneven ground it may be advisable to block the jack up, to increase its lift). Pull on the brakes so that the wheels cannot turn.

To detach the wheel from the hub loosen the three nuts (A), by means of the brace; it is not necessary to remove them entirely. Now pull the wheel outwards about $\frac{1}{8}$ in. and turn it so that the large hole will pass over the nut. The wheel can now be pulled off the hub.

When replacing make sure that the large holes in the wheel centre are properly fitted over their pegs, and tighten the wheel nuts, each only a few turns at a time, until they are home.

Should difficulty be experienced upon the first occasion of removing the wheel from the hub, the wheel nuts may be screwed right off. Before replacing, wipe the outside of the brake drum and inside of the hub with an oily rag as this will ease the removal on future occasions.

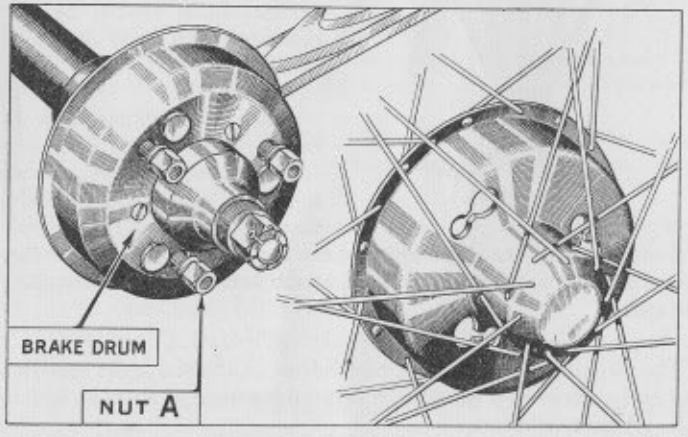




# Periodical Attentions

ON this and the opposite page is a handy summary of all the attentions described in this handbook. The attentions under the daily, weekly, and monthly headings are based on the assumption that the maximum mileage per week does not exceed 300.

The occasional attentions should not be neglected if the car is to continue to run efficiently. When referring to the attentions below, see the lubrication chart.

## Daily Attentions

1. **Examine water level in radiator and fill up to within 2 in. of the top. Always use the strainer when re-filling as dirty water will cause the radiator film to become choked.**

2. **Examine oil level in the crankcase and add more oil if necessary. The tell-tale dipper rod indicates the level of the oil.**

3. **Fill up the petrol tank if necessary. Care should be exercised not to overfill the tank and spill the petrol over the engine.**

## Weekly Attentions

1. **With the grease gun charge—**
   **Front spring shackle pins (4).**
   **Rear spring pins (2).**
   **Front wheel swivel pins (2).**
   **Steering cross tube (2).**

2. **Oil the following—**
   **Handbrake gear.**
   **Pedal gear and joints.**
   **Engine control joints.**
   **Clutch release ring.**
   **Rear brake cam spindles (2).**
   **Steering side tube joints (2).**

3. **Examine both sets of brakes, and adjust if necessary.**

4. **Inject high speed grease (such as Messrs. Sternol's "Diamol") into the universal joint at the rear end of the propellor shaft and yellow grease into the front end of the torque tube.**
5. **Test the tyres for correct pressure and examine them for cuts.**
6. **Give one turn to the cap of the lubricator for the distributor spindle bearing.**

## Monthly Attentions

1. **Examine the oil level in the gearbox which should contain two-thirds of a pint, or measure 2-2½ in. deep.**
2. **Charge the back axle case with the special oil mentioned, using the special adapter on the grease gun.**
3. **Grease all the hubs as described later.**
4. **Charge with grease the steering worm case through the nipple.**
5. **Examine the battery and see that the connections are tight.**
6. **Give a charge of grease to the nipple on the fan spindle.**

## Occasional Attentions

Examine all bolts and nuts, such as road spring clips, cylinder head nuts, wheel nuts (these three especially when the car is new), examine other parts such as steering connections, the radius rod anchorage below the gearbox, and the torque tube socket, neglect of which points might be followed by an expensive repair, and the inability to use the car for a lengthy period.

Occasionally clean the petrol filler and float chamber strainers, the radiator filler strainer, the oil filler strainer, and the oil reservoir gauze (when the engine oil can be changed) ; also ensure that the oil jets, under the plugs on the crankcase. are clean. Drain the gearbox and refill with fresh oil (⅔ pint)

Flush the radiator through. Clean the ignition distributor, and the contact breaker points (adjust the latter), the dynamo and starter commutators. Clean the shock absorbers, adjust the tappets, and the fan belt, decarbonize the engine and grind-in the valves. Check the alignment of the front wheels. For details of these attentions refer to the pages that follow.



# Petrol Supply

Two important alterations in the fuel system of the Austin Seven have been made recently.

All models now have a larger tank which contains when full, rather more than five gallons—the old tank had a capacity of four—and a neat two level petrol tap has been fitted.

A glance at the sketch will show that it is operated not by a cock with a turning movement, but by two plungers.

That under the fascia board controls the main supply. There is a knurled head to the plunger, and to open the tap which permits the main supply from the tank to reach the carburetter ; this knurled head should be pulled towards the driver.

When it is desired to cut off the petrol supply, it is only necessary to push the plunger in.

On the opposite side of the petrol feed pipe, is another plunger, but to operate this it is necessary to lift the bonnet. This is the plunger which controls the reserve supply.. To release the reserve pull the knurled head outwards.

It is important to note that **the main supply tap must always be left open while the petrol is being drawn from the tank.** Although the reserve tap is still open, the main supply tap will cut off the petrol when its plunger is pushed in, and it is this arrangement which enables the driver to cut off the petrol when he is driving on his reserve supply.

When replenishing the fuel tank, see that the reserve supply tap **is closed.**

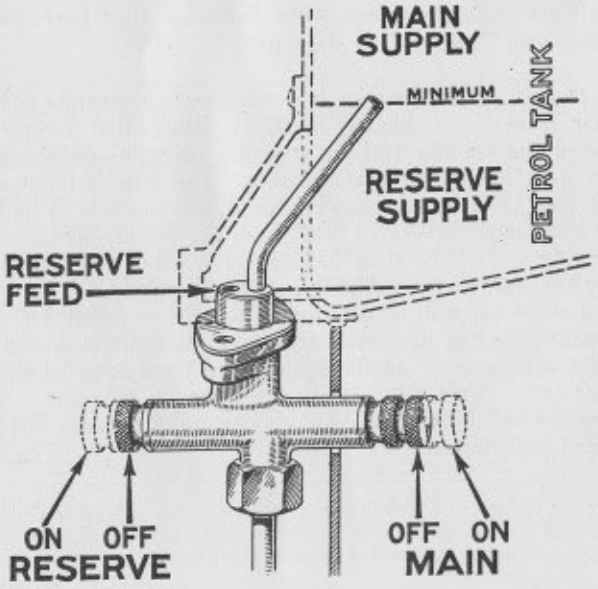

# The CARBURETTER

THE following notes have reference to the Zenith carburetter, which is adjusted by determining the correct sizes of the choke tube, main jet and compensator.* The purpose of the choke tube is to obtain the correct velocity of air around the jet in order to get the best mixture at all speeds. The main jet has most influence at high speeds. The compensator, which corrects the irregularities of the main jet flow due to differences in engine speed, has the greatest influence at slow speeds. Besides these three parts there is a special device to provide for slow running. The carburetter is tuned and set at the works to give the best results under ordinary conditions; should the car be taken to districts where the atmospheric conditions vary considerably, or a different fuel be used, it may be advisable to adjust the carburetter accordingly. Before making alterations to the carburetter make quite sure that the engine is in good running order, particularly the ignition.

## Method of Adjustment

Before altering the carburetter setting, turn off the petrol by means of the tap underneath the tank. A jet key is sent out with each car for the purpose of taking out the main and compensating jets. The caps below the jets must be removed by means of the adjustable spanner, when the jets can be unscrewed with the special key. When replacing either, make sure that they have washers on them, well down on the shoulder.

To remove the choke tube it is necessary to separate the carburetter from the induction manifold flange, first having disconnected the throttle and air strangler controls and the petrol pipe at its union on the float chamber. The throttle fixing screw should then be removed, allowing the throttle spindle to be withdrawn and the throttle to be lifted from the carburetter bore. On unscrewing the choke tube locking screw, the choke tube will usually fall clear if the carburetter is turned upside down; in any event a slight tap will usually loosen it. When refitting a choke tube make sure that its narrowest internal diameter is downwards, and that it beds down on the ledge round the bottom of the carburetter bore; then the locking screw can be tightened. When refitting the carburetter to the induction manifold, ensure that there is a good joint between the flanges.

* For hot climates or high altitudes, a variation of the carburetter settings is advisable, and to enable the owner to make the necessary adjustments, spare chokes and jets are provided on cars destined for use in such places.



## Poor Acceleration

When picking up is bad, or when it is impossible to obtain a sharp acceleration no matter what size of compensator is used, the choke tube is too large. The tests for "pick-up" should be made on the level. Let the car run at a good speed, slow down slightly; then press the accelerator down sharply as far as it will go. The car should then pick up its previous speed quickly and smoothly.

If, instead of accelerating, the engine stops, try larger compensators. If, in spite of this, the picking up is not good, the choke tube is too large, in which case fit another, one or two millimeters smaller, and try again until the acceleration is good.

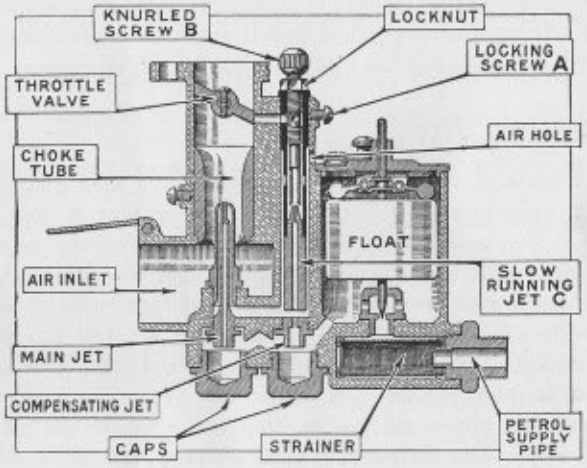


**The Zenith carburetter, type 22FZ. The standard setting is, choke tube 15, main jet 70, compensating jet 75, slow running tube 26-35.**

## Lack of Speed

With too small a choke tube the pick-up is excellent but the speed attained on the level with the accelerator right down is insufficient—a larger choke tube is then fitted, and the jet altered proportionally, when the tests are continued until a satisfactory maximum speed is attained.

## Choking and "Hunting"

To ascertain the correct size of the main jet, the test is also made on the level at high speed. A jet which is much too large causes choking, and the engine often runs jerkily and hunts. The petrol consumption is also excessive. The jet that gives the greatest speed on the level is chosen. If two jets give an equal speed, choose the smaller on the score of economy.

## No Power

When the car gets away badly, and popping-back occurs in the carburetter when accelerating, the main jet is too small. This popping-back occurs at irregular intervals, and the engine has little power and cannot drive the car at a high speed. Fit larger jets until these explosions in the inlet pipe disappear and then test until the right jet has been found, as indicated in previous paragraph.

The popping-back may also be due to air leaking into the induction pipe through joints which are not air-tight, to leakage at the extra air valve, or to the valves not closing properly. Test the tappet clearances by the thin blade of the sparking plug and tappet clearance gauge. In some cases popping back is due to the engine being cold, and will cease when it has been running for a little time.

## Irregular Firing

The trials of different compensators should take place up an incline, with the engine driving the car in top gear at from 5 to 8 m.p.h. The compensator is too large when the engine at this speed runs with an irregular, jerky motion ; the hunting which takes place at high speed in the case of too large a main jet is found at low speeds with too large a compensator. The size of the compensator is decreased until all the cylinders fire evenly and the exhaust is quite regular. As in the case of the main jet, if two compensators give equal results, choose the smaller on the score of economy. The compensator plays a great part in the picking-up but when the size of the former is determined according to the above method, it is generally suitable for an excellent acceleration.

## Slow Running Device

Note that too much petrol for slow running of the engine causes choking and hesitation in pick-up. A want of petrol, on the other hand causes a loss of power and misfiring at the same time. It is therefore necessary to regulate the slow running as carefully as possible. By first releasing the lock nut and then turning the knurled screw B to the right a greater flow of petrol is obtained, while it can be cut down by turning the screw to the left.

This device can be drawn out after releasing the lock-nut and slackening the round-headed screw A on the side. It is possible to unscrew the lower half C, from the upper with a pair of pliers, in order to see if it is clear.



There are other factors quite apart from the carburetter which have great influence on slow running (slow running when the engine is out of gear and the car is stationary).

These factors are :—

Joints not air-tight. Valve guides worn. Valves not seating. Ignition too much advanced. Setting of sparking plug points.

These factors must always be taken into consideration, and one should not suspect the carburetter only, if slow running is not satisfactory.

## Engine Misfires and Stops

In tests made as in the last instance, the engine may miss fire now and again, the transmission receive jerks, and the engine finally stop. In this case fit a larger compensator until the engine runs regularly.

## The Float Chamber

Petrol leakage from the float chamber may be due to the caps under the jets not being tight, or a leaking petrol pipe union. If no leakage seems possible at these points, suspect float chamber derangement, which is causing petrol to overflow the jets. It may be that the float control is out of adjustment, the float may be perforated, or the needle not seating properly owing to dirt on the needle seating. The remedy for the last mentioned defect is obvious ; the first two defects should be left to an expert to remedy. When replacing the float chamber cover, ensure that the needle has entered its seating, and is free to be moved by the float ; also that the cover beds down properly, then secure it with the clip.

## Petrol Flow

If the petrol supply from the tank is unrestricted, but difficult starting points to insufficient petrol, there is a restriction somewhere in the carburetter. First, see that the air vent in the float chamber cover, under the retaining clip, is clear. Should it be so, the next point to examine is the filter below the float chamber, and the passage from it to the needle seating. Access to this filter is given by removing the petrol pipe union and unscrewing the petrol inlet nut, on the bottom of the float chamber.

The slow running tube and jet may be stopped up. Remove the slow running tube bodily, having loosened its locking screw. In the bottom of the tube is a small filter which can be prised out and cleaned. The bottom portion of the tube, comprising the jet, may be then unscrewed from the top portion, and the jet cleaned if stopped up ; two flats on the jet allow a small spanner to be used to unscrew it. Lastly the compensating or main jets may be choked. Remove them and clear them. Never insert anything in any of the jets ; always blow through to clear them ; a tyre pump can be used if desired. When refitting the slow running tube ensure that it beds down to its collar at the top, with the small projection under the collar fitting the groove in the carburetter casting, then tighten the locking screw.

## Difficulty in Starting

This may be due to several causes—

Float chamber air vent stopped up. Slow running tube stopped up. Jets choked up. See previous pages.

Plug points too far apart. See "Ignition System."

Ignition lever badly placed. See next paragraph.

With variable ignition there is generally a particularly favourable setting for easy starting. One who is continually using a car soon recognises this position.

# Standard Repair Charges

THE following adjustments and repairs described in this handbook are included in the Austin Seven Schedule of Charges for Repairs, which quotes over one hundred prices for repairs to the Austin Seven.

Greasing spring shackles, steering and brake, and other small connections.

Ditto, but including rear axle, universal joint, steering box and front hubs.

Taking down, cleaning and greasing all road springs, reassembling with new bolts and bushes where required.

Dismantling shock absorbers, then cleaning and adjusting and refixing.

Adjusting and compensating brakes.

Relining brakes, front or rear.

Removing cylinder head ; decarbonising and grinding in valves adjusting tappets and tuning-up engine on the road.

Fitting new cylinder head and/or gasket.

Adjusting valve tappets, cleaning and adjusting contact breaker, distributor and sparking plugs ; cleaning out carburetter jets.

Fitting new valves.

Removing base chamber, cleaning oil filter, examining interior of engine, and refilling with new oil.

Removing dynamo from car ; cleaning and adjusting, examining battery and connections, and refilling battery with acid as required.

Tracking up front wheels by adjusting length of cross steering tube.

Adjusting mesh of steering worm and wheel.

Owners will find it to their advantage to have their car adjustments and repairs effected by Austin agents at these standard prices.



# The Ignition System

THE recommendations that follow apply to the C.A.V. Lucas ignition equipment.

The set should be examined occasionally and the following attentions given, only if they seem necessary.

## The Distributor

The distributor cover can be removed on springing aside its two securing clips (B). The electrodes and the inside of the cover are then accessible for cleaning with a dry duster. The contact breaker points can be similarly cleaned if required. The gap between the points when fully opened, is set originally at 20 thousandth of an inch. Normally this gap will not require adjustment until a considerable mileage has been covered, unless the points have burned. The work of re-setting the points, when this has occurred, should be left to a skilled mechanic. For the normal adjustment, first turn the engine by the starting handle until the points are seen to be fully open. Then slacken the lock-nut (D) with the ignition spanner, and turn the screw of the movable point until the gap is set to the thickness of the gauge on the side of the spanner. The lock-nut must then be re-tightened.

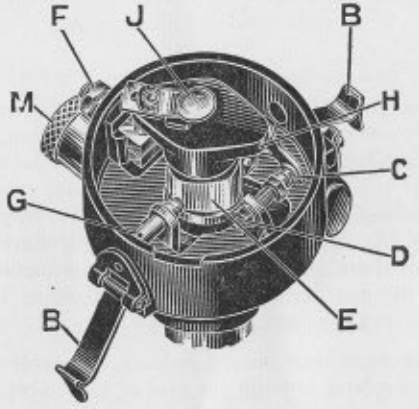


**The distributor, showing the distributor cover removed ; B, the securing clips for the cover ; C, the contacts ; D, the locking nut for the adjustable contact point ; E, the rotating cam ; F, Celeron heel ; G, the oil hole for the wick that lubricates the cam ; H, the rotating arm of the distributor ; J, the spring contact for the high tension current ; and M, the greaser for the distributor spindle bearing.**

Only two points require lubrication ; both are on the distributor. Every 500 miles give two turns to the lubricator for the distributor spindle bearing. When the lubricator is empty, unscrew its cap, and repack it with grease. A few drops of thin machine oil can be given to the cam lubrication wick, through the hole at "G," whenever the wick seems dry. To over lubricate these parts is far worse than to under lubricate them.

## The Coil and Switchboard.

The coil needs no attention apart from keeping the terminals tight and the top clean.

The left-hand switch on the switchboard, additional to controlling the dynamo charge, serves as an ignition switch. The switch should be always turned to the " OFF " position when the engine is not running, so that the battery does not discharge by the current continuing to flow through the coil windings.

The warning lamp on the switchboard will light when the switch is at " Summer ½ Charge" or "Winter Full C." and the engine is not running. This lamp also lights when the engine is only idling. Should the bulb of the warning lamp fail, it can be unscrewed from its socket when the small cover plate holding the red glass is removed. The replacement bulb should be of 8-9 volt, and must be screwed right home to make contact.

## Ignition Faults

When the engine will not fire, or fires erratically, the trouble may arise from the carburetter, or petrol supply and not the ignition. A partially choked jet, an incorrect petrol level, or air leaks into the induction system may be the faults. Equally, sooted plugs can be suspected, when dismantling and cleaning them will remedy the trouble. If the battery has run down, or its terminals have worked loose, quite obviously there will be no spark, and the same results can be expected if the distributor electrodes and contact breaker have been neglected and are dirty.

The coil can be tested by removing the cable from the centre socket on the distributor cover, and holding the end of this cable, about ¼ inch from some metal part of the car, while the ignition switch is on and the engine is turned. A strong and regular spark will result if the coil is in order. Clean the top of the coil, and ensure that its terminals are tight before making this test.

To test for short circuits in the low tension wiring (the cables from the switchboard to coil, coil to distributor, and distributor to chassis) which would equally cause irregular running, have the engine turned while the ignition is switched on, and watch the ammeter reading. It should rise and fall as the contact breaker points close and open. This test will also indicate if the contact breaker is functioning correctly. If the contacts remain open, or do not fully close, the reading will not fluctuate.

If the high tension cables from the distributor to the plugs, are not pushed home into their sockets in the distributor, misfiring will occur. Or, if the rubber insulation on these cables shows signs of perishing and cracking, there may be leakage of the current giving rise to the same symptoms. Renewing the cables is then the remedy.



If after verifying these points, the trouble remains undiscovered, the equipment should be examined and tested by the nearest service depot of the makers.

## Sparking Plugs.

**Gap Setting.** The gap between the sparking plug points should be .018in. Too wide a gap would cause misfiring, especially at high speeds and under heavy pulling at low speed with an open throttle, while too small a gap causes poor idling. When adjusting the gap, never bend the centre wire.

**Cleaning.** During the first several hundred miles of operation it may be necessary to clean the sparking plugs. During this running in process, an excess amount of oil is sometimes used, and carbon may deposit on the sparkling plug insulator causing a fouling condition that soon disappears when the motor has been well run in and a change of oil has been made.

**Other Conditions causing Fouled Sparking Plugs :**
Poor Grade of Oil. Improper Carburettor adjustment.
Poor Grade of Petrol. Excessive use of choke.
Faulty cables. Distributor points out of adjustment.

**Change Sparking Plugs every 10,000 miles.** It is recommended that sparking plugs be replaced at intervals of every 10,000 miles.

## When Leaving the Car

When the car has to be parked or left in the street for any period, the distributor cover can be lifted, and the rotating distributor arm removed from its mounting above the cam ; it just pulls off without turning. The car is then secure against any attempts at theft, and the distributor arm can be carried in the pocket until the car is to be used again. When refitting it, note that the projection up inside its moulding, fits the slot cut in the top of the spindle on which it mounts, so that it is located for correct timing.

---

# TIMING THE IGNITION

In the event of the distributor (with or without the dynamo) being removed from the car, upon replacement, the timing of the ignition must be re-set.

The first operation is to remove all the sparking plugs, except the front—No. 1—and turn the crankshaft by the starting handle until compression is felt. This means that No. 1 cylinder will be the next one to fire.

## Flywheel Timing Marks

Then remove the starter motor with its casing (inside the car) by unscrewing the securing studs, one on each side of the casing, and lifting the assembly clear vertically off the locating dowel on the crankcase. A line will be seen on the back of the flywheel, marked 1 and 4 (see illustration on page 28). The line is parallel to the throws of the crankshaft, and when this line is vertical it naturally follows that Nos. 1 and 4 pistons are at the top of their stroke. In this case, however, we are only dealing with No. 1. Now turn the flywheel until this line is 1¼ in. to 2 in. before the top centre. (We cannot quote a definite figure as this depends on the characteristics of the particular engine). This is the position at which the spark should take place at the sparking plug, when the ignition is fully advanced, and the ignition lever on the steering wheel is set at the full advanced position.

The ignition leads will pull out of their sockets on the distributor cover. Remove the cover by springing back the two securing clips. The small screw on the clip fixing the control arm to the distributor casing is slackened, the clip being kept at the full advanced position, and the casing turned anti-clockwise until the contact breaker points just begin to open. The screw should then be re-tightened. The direction in which the rotating arm of the distributor is pointing should be noted, and the distributor cover refitted, and secured in its proper position by the two clips. A small projection on the casing fits in a recess near one of the clips to secure the distributor cover in its correct position.

## Replacing the Leads

With the cover replaced, push the ignition lead for No. 1 cylinder into the socket above the segment towards which the distributor rotating arm is facing, as previously noted, and insert the other leads in their sockets.

The distributor arm rotates clockwise, so working round the cover in a clockwise direction the lead for No. 3 cylinder should be fitted next, and then the leads for cylinders 4 and 2, this being the firing order.

If after this the ignition seems too much or too little advanced, it can be adjusted by loosening the clamping screw of the control clip and moving the casing relative to the clip a slight amount, anti-clockwise to advance the timing, or clockwise to retard. Only an extremely small movement is required, then tighten the screw. When refitting the starter motor and casing, after timing, the longer set screw is for the near side of the casing.



# The Cooling System

THE cooling of the engine is maintained by a capacious radiator which should be filled, with rain water, if available, up to within 2 in. of the top of the filler. The capacity of the radiator, pipes and cylinder jackets is 9-10 pints.

## In Cold Weather

Care should be taken to see that the water is drained off completely, for, in case of freezing, it will do harm by lodging in small spaces and fracture of the cylinder block may result. In Great Britain, the climate does not very often call for the cooling system to be drained, but it is well to err on the right side and take due precaution against damage if frost be threatened.

Glycerine mixed with the water will reduce its freezing point by several degrees. If added it should be in the proportion of 15% to 20%. In cold weather use the Austin radiator muff.

To prevent the gradual formation of deposits in the cooling system, with consequent impeding of the circulation, the use of hard water should be avoided. Rain-water, syphoned from the top of the barrel where it is clean, should be used, or, failing that, water that has been boiled.

## Causes of Overheating

Overheating may be attributed to one or more of the following:

Slack fan belt. The belt can be tightened by turning the fan spindle in its bracket after loosening the clamping-nut.

Excessive carbon deposit in cylinders. See "Running Adjustments."

Running with ignition too far retarded.

Using oil of poor quality, or lack of oil in the reservoir. See "Engine Lubrication."

Partial choking of the oil jets. See "Engine Lubrication."

Improper carburetter adjustment, giving a mixture too rich or too weak. See "The Carburetter."

Failure of water to circulate, because of choked radiator tubes, water level below the tops of the radiator tubes, or loss of water through leakage from connections.

Overcooling is almost as bad as overheating. If the engine tends to be too cool, use a radiator muff, or possibly, in winter the fan belt can be removed without the engine running too hot.

The entire circulating system should be thoroughly flushed out occasionally. To do this open the drain tap at the bottom, place a hose in the filler, and run fresh water through.

Trouble arising from a damaged radiator generally necessitates its dismantling and despatch to a repair depot.

# New Type Grease Gun

WE are now supplying a new type of grease gun in the tool kit of all Austin cars. It is known as the Enots "Autolub" gun, and incorporates new features by which the chassis lubrication of the car is greatly simplified.

Instead of screwing down the plunger spindle, in order to fill the ram of the gun, as in the type previously supplied, once the gun is charged all that is necessary is to keep pushing the ram of the gun against the nipple until the contents are exhausted.

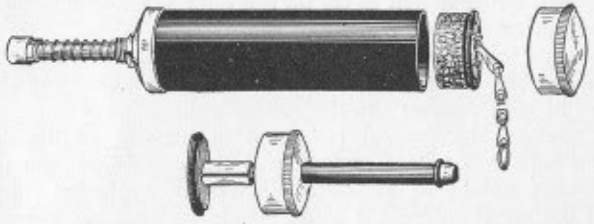

The ram is automatically returned to its extended position by a spring. This action creates a vacuum in the gun by means of a valve, and thus refills the high pressure chamber contained in the ram.

Inside the nozzle of the ram, there is a small fibre washer, which ensures a good leakproof joint between the gun and the nipple, even though the gun is not applied squarely on to the nipple. When filling the universal joint with grease, or rear axle with oil, the end cap of the gun is removed, the cork plunger drawn out by means of its chain, and the special adaptor fitted in place of the end cap, which allows a larger quantity of lubricant to be injected rapidly.

The ram is used for forcing grease through nipples, and the adaptor for lubricating the universal joints with grease and back axle with oil. For the latter operation, first replace the screw-on cover of the ram, then remove the end cap from the barrel of the gun, pull out the cork plunger by means of the chain, and charge the gun to about three quarters of its capacity. Put the cap of the adaptor on the open end of the gun, and after removing the plugs from the universal joints or back axle, place the end of the adaptor into the greasing holes, and grasping the barrel, push. This will inject a large quantity of lubricant rapidly.

When charging the gun, it should be filled with lubricant to about *three-quarters* of its capacity.



# Lubrication.

## Choice of Lubricants

EVERY engine and gearbox is tested and filled with oil supplied by the Vacuum Oil Co., Ltd. The grade we recommend both for winter and summer use is Mobiloil B.B.

The following oils are approved :—

Sternol's W.W. Heavy ; Prices Motorine C ; Triple Shell ; Castrol X.L. ; Filtrate Extra Heavy ; Duckham's Adcol N.P. 3 ; Silvertown Speedolene B. ; Speedwell Sans Egal Zero, and Pratts Medium Heavy.

Use ordinary "engine" oil in a small can, and ordinary yellow grease for greasing.

Both these lubricants can be obtained from any garage or repair shop.

Use Sternol's "Diamol" High Speed Grease for the rear universal joint of the drive shaft.

For the rear axle use Jaba Oil (Johnsons Austin Backaxle Oil) or Mobiloil C.

## The Engine

For the engine, where the approved oils are not obtainable, oil of approximately the same constituents and viscosity should be used. If the oil is too thick it will tend to clog and carbonise, and if too thin it might lead to scoring of the pistons and bearings. Assurance that the system is functioning is given to the driver by means of the dial on the instrument board.

It is essential that all receptacles for oil be kept perfectly clean. Dirty oil leads to undue wear of all bearings, or might even clog up the oiling system and prevent it working, thus causing an engine seizure and much trouble and expense. The oil filler strainer (A) is detachable for cleaning. After the first 500-800 miles running, drain the original oil from

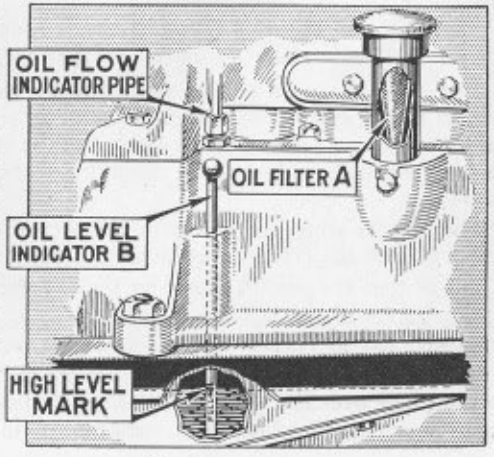

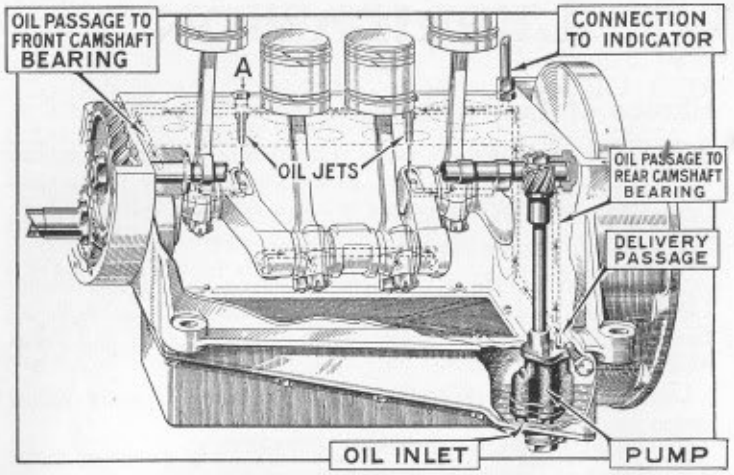


the reservoir by removing the plug in the bottom, while the engine is hot. Drain the reservoir completely. Never pour oil into the engine except through the strainer.

After the first re-filling it is advisable to change the oil in the engine entirely after every 1,200 to 1,500 miles running or sooner.

Every 2,400—3,000 miles remove the oil reservoir. The gauze oil tray will then be accessible for removal. Scrupulously clean the gauze and remove all dirt from inside the reservoir and replace them. Carefully remake the joint with the packing washer, covering both sides of it with grease. When tightening up the nuts holding the oil reservoir to the crankcase, do not pull up one nut tight, but tighten each nut equally, a little at a time. See that the drainplug is screwed up tight, then fill the crankcase with oil to the maximum level as shown on the dipper rod, B. About half a gallon will be enough to fill.

Always inspect the level of the oil and add, enough to fill, to the correct level before starting on a long journey.

The oil level should not be allowed to go below $\frac{1}{4}$ inch on the bottom of the dipper rod. It is advisable to wipe the dipper rod before taking the reading of the level, and the reading should only be taken when the engine is not running and the car is on the level ground.

The main bearings of the engine are of the roller type, and the oily vapour in the crankcase is quite sufficient to lubricate these.

The pistons are also lubricated by the oily vapour.

Lubrication of the big-ends is effected by catching oil from the pump-fed jets in pockets on the crankshaft webs.

It is advisable to make sure these jets are always clear and to do so the plugs over the iets (see illustration) should be occasionally removed and a piece of stiff wire, not above $\frac{1}{16}$ in. diameter, inserted



through the jets. This prevents foreign matter accumulating in the jets and choking them.

## Dial Oil Gauge.

An oil pressure gauge which records up to 20 lbs. is now part of the equipment of the instrument board of the Austin Seven.

The dial will probably record the maximum pressure when the engine is started from "cold," but as the engine warms up in running, so the oil will become more fluid and the pressure will fall quite low —it may even record only one pound. This, however, is sufficient, because if the oil is circulating that is all that is necessary.

An obstruction in the oiling system while the car is running would be indicated by a sudden rise in the pressure on the gauge.

This uuusual difference to the normal registration on the dial, would be quickly noticed, and the cause of the variations ascertained and set right.

## Gearbox

A suitable oil for the gearbox is the same as that used in the engine ; but if for any reason another brand of oil is used it should be of about the same consistency and no thicker, otherwise it will not reach all the bearings. The depth of the oil should never be less than 1 in. or more than $2\frac{1}{2}$ in. It can be measured by the engine dipper rod inserted through the filler plug hole, but not while the engine is running. The maximum quantity is approximately $\frac{3}{8}$ pint. The correct oil level should be maintained ; excess of oil will leak from the bearings and seriously affect the clutch, causing it to slip ; on the other hand there must be sufficient oil to prevent wear.

The gearbox should be drained entirely after the first 500-800 miles, and then after every 4,000 or 5,000 miles, when any grit, etc., which may have collected will drain away through the plug hole in the sump.

The gearbox drain plug holds the clutch pit drainhole cover in position and this should be replaced when the drain plug is refitted.

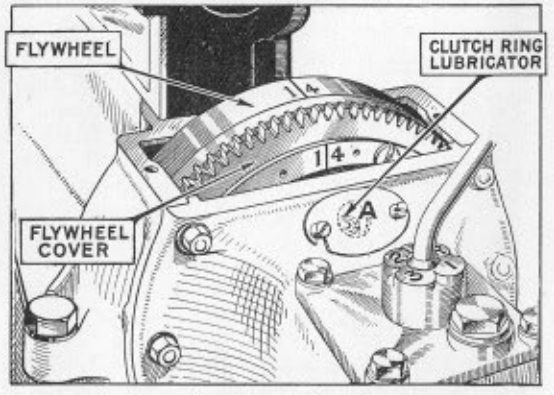


## Clutch

The clutch surfaces being of a fabric material must be kept free from oil and grease, or the clutch will fail to grip. It is necessary to lubricate the operating ring at point A, as shown on the sketch, once a week with oil.

## Steering Gear

To obtain easy steering it is important to give it regular attention as regards lubrication. The grease gun nipple is on the top of the worm case, and if a charge is given once a month it is sufficient to lubricate the bearings of the worm and worm wheel and also lubricate the worm itself. However, if too much grease is injected at this point, it will get up the column and exude round the steering wheel. The bearing at the top of the column, just under the steering wheel can be given a little oil from the oil-can. The steering connections on the side rod are best lubricated by means of an oil-can which ejects the oil under pressure, into the sockets, and the nipples at the end of the cross rod should be given a charge of grease once a week.

## Rear Axle

For the rear axle, attention every 1,200 to 1,500 miles should be sufficient. Jaba Oil or Auto Gear Compound as mentioned previously should be used. It is injected into the axle, using the special adapter on the grease gun barrel. First remove the plug, then place the end of the adaptor into the greasing hole, and grasping the barrel of the grease gun, push. When replacing the plug see that the washer is not omitted. Do not inject too much at any one time as the felt rings will fail to hold the lubricant in the axle case, and it will then leak through on to the brakes and prevent them from being effective.

If possible one of these oils should always be used, but in cases where supplies are not immediately procurable. obtain a worm oil or a gear oil of medium viscosity.

## Rear Universal Joint

For the rear universal joint, Sternol's "Diamol" "high speed" grease should be used. It will remain in the joint longer than the ordinary yellow grease.

The rear universal joint being of metal **should be one of the points to have strict weekly attention.** The car is moved until the plug in the universal joint is facing upwards (if it is not already so) and the grease is injected in the same manner as is used for oiling the back axle. Access is gained by moving aside a small cover in the floor of the body. This same cover gives access to the nipple on the end of the torque tube which should receive ordinary yellow grease every week.

## Brake Gear

On each of the rear wheel brakes there is a lubricator for oiling the cam spindle bearing. These and all other joints, etc., should be oiled once a week.

The front wheel brake cam spindle is lubricated from the swivel pin as shown at B, in the illustration on page 30.



## Front Axle

The swivel pins are lubricated with the grease gun and should receive attention once a week.

## Radius Rod Anchorage

Oil should be applied occasionally to the cups and ball flange, forming the radius rod anchorage on the front cross member, just below the rear of the gearbox.

## Windscreen Wiper

A drop of thin oil should be occasionally applied to the windscreen wiper mechanism—say, once a month. A small screw (except in the Trico model) is removable from the top of the casing allowing the oil to be injected.

## Fan

The fan bearing requires a charge of grease once a month through the nipple on the fan bracket.

## Grease Nipples

If a grease nipple gets choked, unscrew and remove it. It can usually be cleared by soaking it in paraffin or petrol, and syringing either of these through it, but should it be found impossible to clear it, fit a new nipple in its place.

## Road Springs

The ends of the road springs where they are attached to the axles are provided with grease gun connections, and should be given a charge once a week if the car is continually used. After a long period of use it is advisable to lubricate the leaves of the spring with a warm mixture of white lead and tallow in equal parts. This can best be applied with a stiff brush, the leaves being eased apart by a screwdriver; first jack up the car, not under the axles, nor the radius rods, but under the frame to take the weight off the springs. The rear of the car can be jacked up one side at a time. The best point of the frame at which to apply the jack is each end of the rear cross-member. At the front, as there is only one transverse spring, the whole of the car must be lifted, and as a safety measure, the rear wheels should be "scotched" to prevent the car running off the jack. A short stiff bar is placed across the frame, just forward of the engine oil reservoir, and behind the spring, and the jack lifts the car from the centre of this bar. Block the jack up for this work, with a wood block, to avoid making excessive lift.

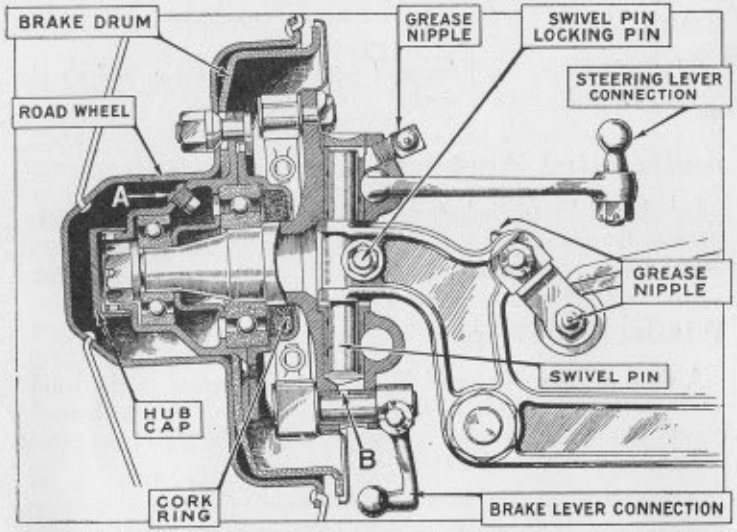


The front hub in section, showing the grease plug A.

## Front Hubs

Remove the road wheel. Turn the hub until the plug "A" is at the top. Screw out the plug and apply the adapter of the grease gun.

It is important that the hubs are not given too much grease, otherwise it will penetrate to the brakes to render them ineffective.

## Rear Hubs

Remove the road wheel. Turn the wheel until the nipple "A" is at the top. Inject grease into the hub; about the same quantity as was recommended for the front hubs is a suitable amount.

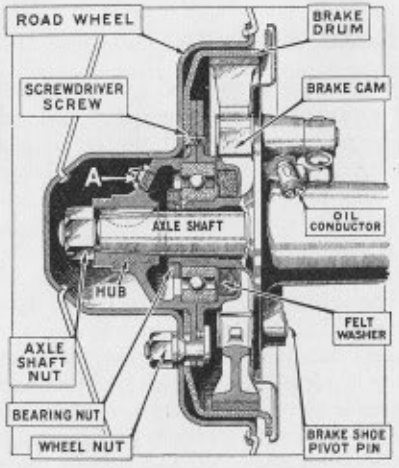


A section of the rear hub, showing the nipple **A**.



## LUBRICATION CHART

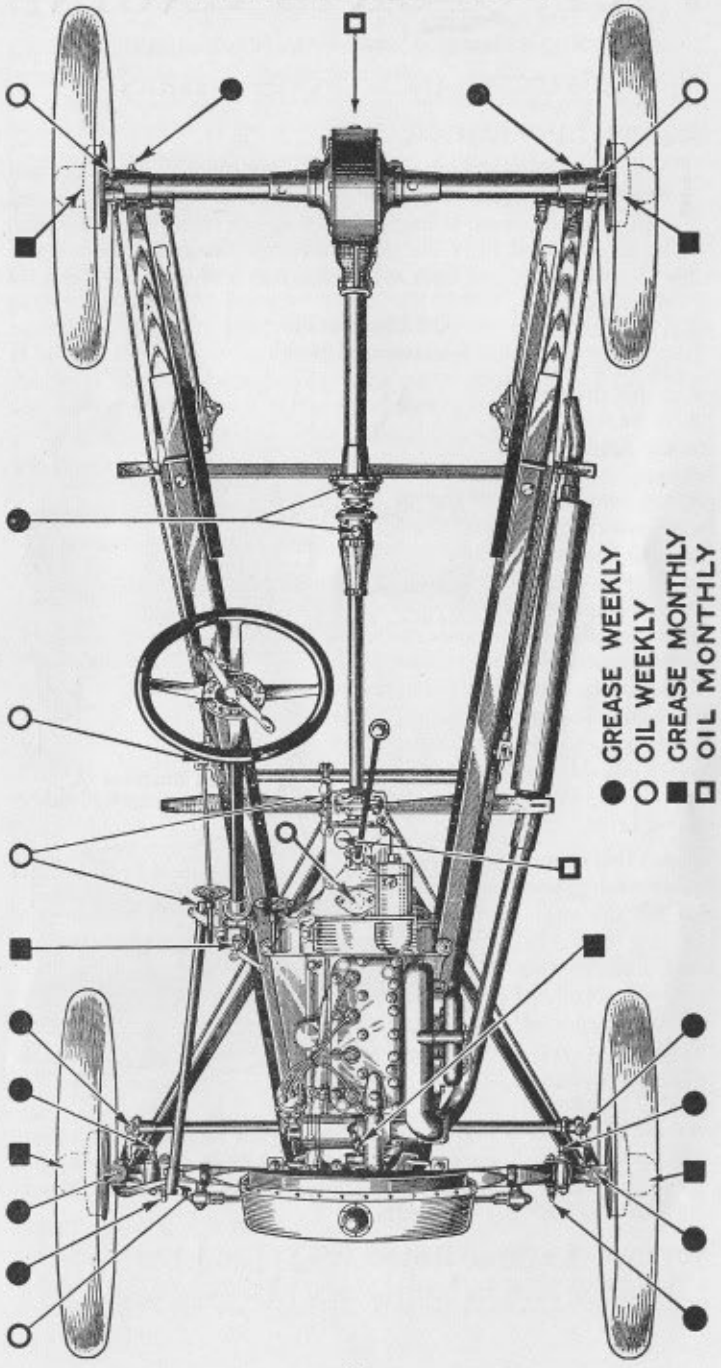

# 7 H.P. Sports Engine

(Supercharged and Unsupercharged).

MAINTENANCE INSTRUCTIONS

## Engine Lubrication.

THE connecting rod big ends and the camshaft of sports engines are fed under pressure, while the crankshaft, which is carried on roller bearings, is lubricated by splash from the crankcase. The oil is forced from the pump through channels cast integral with the crankcase, and then via a pipe into a chamber B (Fig. 1) in the crankcase front cover.

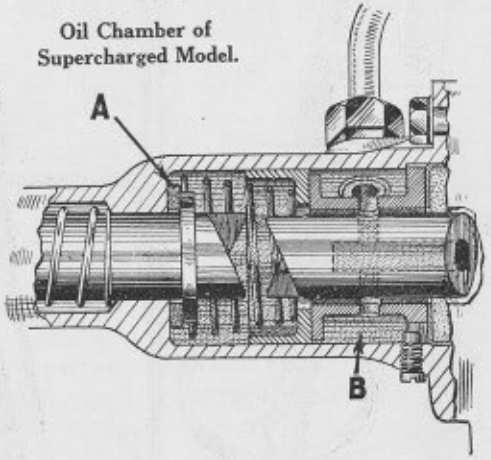

Oil Chamber of Supercharged Model.

The oil is retained in this chamber by means of a leather washer A, between a facing on the crankcase front cover and a flange on the starting handle shaft, the joint being rendered oiltight by the pressure of the oil itself. Should a leakage of oil occur at this point, the cover should be removed and a new washer fitted.

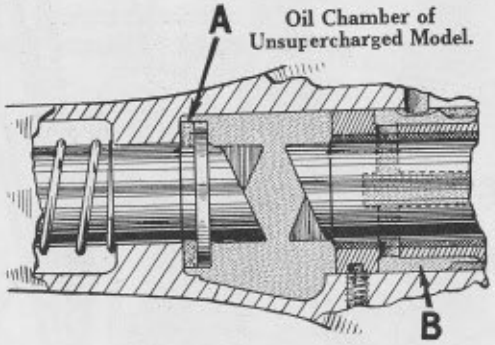

Oil Chamber of Unsupercharged Model.

From this chamber the oil passes through the starting dog into the front end of the hollow crankshaft and is distributed to the four connecting rod bearings. The normal pressure of the oil is high, being in the region of 50lbs. per square inch under normal working conditions. Other instructions with regard to the oil reservoir, etc., are contained in the Handbook. Use Mobiloil "R" for both engines.

## Normal Engine Revs. (Safe limits.)

The limit of safety for both engines is 5,000 r.p.m. (approx.).



## Supercharger Lubrication.

A special oil tank is fitted alongside the petrol tank for supercharger lubrication, and care must be taken to see that oil is constantly being fed to the supercharger. If the supercharger has been well run in, say 1,000 miles, the amount of oil can be slightly reduced by means of the adjuster on the supercharger oil pump. (See Cozette handbook.)

For lubricating the supercharger use Mobiloil "TT."

## Petrol Feed.

For ordinary running of the supercharged engine the pressure in the petrol tank should be maintained at, but not exceed, 1lb. per square inch. If the pressure drops too quickly, look at the leather washer on the filler cap—it may have become dry and be leaking. If this is the case, a smear of oil on the leather will soon rectify matters. It is also imperative that a small quantity oil is mixed with the petrol. (See Cozette handbook).

On the unsupercharged model, petrol is gravity fed.

## Valves and Tappets.

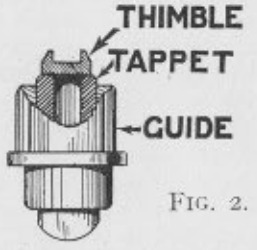

FIG. 2.

The tappets in these engines are not adjustable. In place of the usual tappet screw and lock-nut, a hardened thimble is fitted on the supercharged model, this is of the cup type. On the unsupercharged engine it is of the mushroom type. The clearance, which is set before the car leaves the works, is .004in. to .006in. for the inlet valves, and .006in. to .008in. for the exhaust valves. The valves are tulip shaped and have a square recess for grinding-in purposes in place of the more usual screwdriver slot.

## Ignition.

The ignition on the supercharged engine is by magneto, instructions for which will be found in the makers handbook.

K.L.G. No. 244 spark plugs should be used.

The ignition on the unsupercharged sports engine is by battery and coil, as fitted standard to other Austin Seven models.

The spark plugs should be K.L.G. No. J.1.

## Carburettor.

The carburettor and supercharger are by Cozette, and any instructions required, other than those given in this leaflet, will be found in the Cozette handbook.

The carburettor fitted on the unsupercharged model is a Solex type M.O.V. For instructions see makers' Handbook.

## Rear Axle Lubrication.

To lubricate the rear axle, unscrew the brass plug on the centre of the inspection plate and fit in its place the adapter supplied with the tool kit. When the oiling operation has been completed, replace the brass plug.

# Care of the Lamps

## Bulb Replacement

TO remove the front of the head lamps for a bulb replacement, press the front rim evenly, and then rotate to the left (looking at the front of the lamp) as far as possible, when the front may easily be withdrawn. In the case of a tail lamp bulb replacement the front is removed by unscrewing it to the left.

## Bulb Sizes

The sizes of the bulbs are:—Head, BAS No. 1 (S.P.); Dim, BAS No. 8 (S.P.); Tail, BAS No. 8 (S.P.)

## The Reflectors

The reflectors of the lamps are covered with a protective coating, and any marks can be easily removed by means of a soft cloth.

## Care of the Outer Body

If the ebony black becomes dull in service, the original finish can be restored, no matter how neglected it may be, by a good furniture or car polish.

## Focussing

Unless the focus of the bulb in the reflector is correct, quite half the possible light may be lost. A correct focus is secured by means of the choice of several positions in which the bulb may be fixed. Set the lamps correctly level, pointing neither up nor down. They can be adjusted, either horizontally or vertically, by slackening the nut holding the lamp to the bracket.



# Electrical Equipment

THE lighting and starting units on the Austin Seven car are arranged for wiring on the single wire system, the return path of the current being provided by the frame instead of a second wire. It is essential that all units are in metallic contact with the frame.

Should difficulties arise that cannot be understood or remedied from the information given below, application should at once be made to the Austin Service Department or the nearest service depot of the makers of the equipment.

## Dynamo

The dynamo is a simple self-regulating third brush machine. The only parts calling for any attention are the commutator and brushes, which are readily accessible when the clip secured cover is removed. The commutator surface must be kept clean and free from any oil or brush dust. It may be cleaned with ordinary soft rag but if it has been neglected use fine glass paper. Blow away any carbon dust, see that the carbon brushes are wearing evenly and move freely in their holders. To fit a new brush it is only necessary to release the brush tag, hold back the brush trigger and then withdraw the worn brush from its holder. The new brush can then be fitted by reversing the above operations.

The dynamo bearings are packed with grease before leaving the works and need very little attention. A few drops of ordinary engine oil, however, may be added through the lubricator near the mounting flange, say every 1,000 miles. **The owner is cautioned that far more trouble is caused by excessive oiling than by too little.**

## Starting Motor

The commutator is accessible on removing the clip secured cover. The unit requires very little attention beyond keeping the commutator clean and free from oil, brush dust, etc., as in the case of the dynamo. Before starting from cold do not neglect the preliminary precautions that you would observe if starting by hand, such as flooding the carburetter, etc. Remember that although the starter will turn the engine over, however stiff, it is advisable to crank the engine over by hand two or three revolutions as this will considerably diminish the load for starting.

If the starter pinion jams in mesh with the flywheel ring when operating the starting motor switch, usually it can be released by putting the gear lever into top gear, and moving the car bodily backward and forward. If this plan is ineffectual the starter will have to be dismantled.

Never use the starting motor to propel the car, as it throws too severe a strain on the battery and the motor.

If the engine does not start at the first attempt, do not press the starter switch until the engine has come to rest. If this precaution is not adopted, the starter ring teeth on the flywheel cover, or the starter pinion teeth, may be damaged.

## Switchbox

The switchbox houses two switches controlling the lighting and charging circuits, a centre-zero ammeter and the ignition warning light. The charging switch is also arranged so that in the "off" position it breaks the ignition circuit, thus obviating the necessity of a separate switch.

## Switch Positions

Each switch has three positions. Left hand switch (1) "OFF" position—dynamo not charging and ignition off. (2) "Summer ½ Charge" position—ignition operating and dynamo charging with half its normal output. (3) "Winter Full C" position—ignition operating and dynamo charging with its full output. Right hand switch (1) "OFF" position—all lamps off. (2) "S" position—headlamps dim and tail lamp. (3) "H" position—headlamps bright, and tail lamp. Switching on lamps automatically puts the dynamo on full charge.

## Ammeter

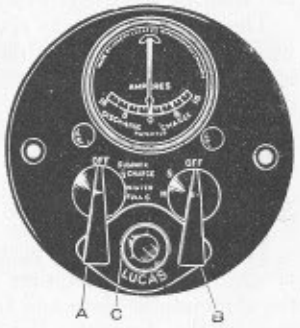


The centre zero ammeter indicates the rate at which the battery is being charged or discharged under all conditions. For instance suppose 2 amperes are consumed when the dim lamps and tail lamp are switched on, and that the ignition coil takes 2 amperes, then if the dynamo is generating 7 amperes the meter will show 3 amperes on the charge side of the scale. This is the current in excess of the lamp and ignition load that is available for charging purposes.

The ammeter gives an indication that the system is functioning satisfactorily. For example if no reading is given on the charge side of the scale when the ignition and charging switch is in the "Winter Full C" position and the car is running at say 20 m.p.h. with no lights on, then a fault in the dynamo charging circuit is indicated.

To determine the output of the dynamo, switch off all the lights and add the amount of current used for ignition (about 2 amperes at normal speeds) to the reading given on the ammeter.



The amount of current used for ignition may be somewhat higher than the above figure when starting. The ammeter does not indicate the amount of current used by the starter.

## Cut-out and Fuse

The cut-out and fuse are mounted on the same base, the larger cover "A" protecting the cut-out and the smaller one the terminals and fuse. The cut-out automatically closes the charging circuit as soon as the dynamo voltage rises sufficiently above that of the battery. When the dynamo voltage falls below that of the battery, the reverse action takes place, the cut-out opens and thereby prevents the battery from discharging itself through the dynamo.

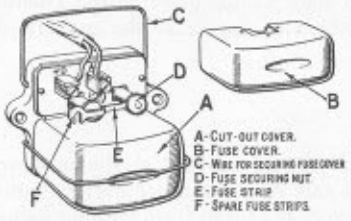


The cut-out is accurately set before leaving the works, and does not need any adjustment and is therefore sealed.

The cover "B" protecting the fuse holder and terminals is removed by springing up the retaining wire "C".

To fit a new fuse it is only necessary to remove the knurled nut "D" place one of the spare fuse strips "F" over the post, and then replace and tighten up the nut.

**Should it be found that the fuse is continually blowing, do not use two or more strips to prevent this occurring, but have the equipment thoroughly examined to find out the cause of the trouble.**

## Battery

It is of the utmost importance that the battery receives regular attention, as upon its good condition depends the satisfactory running of the starting motor, the functioning of the ignition, and the illumination of the lamps.

## Regular Inspection

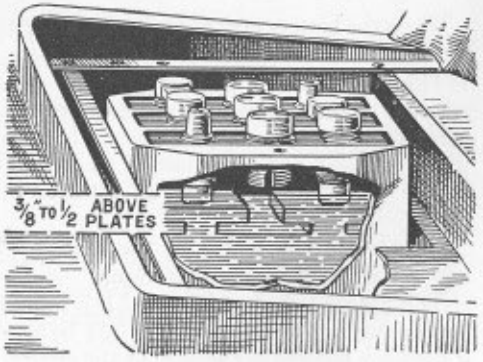


At least once a month the vent plugs in the top of the battery should be removed and the level of the acid solution ex-

amined. If necessary, distilled water, which can be obtained at all chemists and most garages, should be added to bring the level well above the plates. If, however, acid solution has been spilled it should be replaced by a diluted sulphuric acid solution of 1.285 specific gravity. It is important when examining the cells that naked lights should not be held near the vents on account of the possible danger of igniting the gas coming from the plates. It is advisable to complete the inspection by measuring the specific gravity of the acid, as this gives a very good indication of the state of charge of the battery. An instrument known as a hydrometer is employed for this purpose; this may be obtained at the Austin Service Department, or from the service depots of the makers of the equipment.

## Charging Switch

The charging (left hand) switch should be kept at the position appropriate to the season. For cars running under average conditions this will ensure that the battery is kept in form without being overcharged. However, in some circumstances it may be advisable to use the switch out of season. Thus if in winter the car is run regularly during the day with practically no night running, resulting in the battery always being fully charged (hydrometer reading 1.285 or over), the switch should be kept in the "Summer ½ Charge" position when the engine is running. Or conversely, if exceptional use of the starter and lamps is made in the summer, causing the battery to be continuously in a low state of charge (hydrometer readings of 1.200 or under), the switch should be kept at the "Winter Full C" position while the engine is running. **Always keep the switch at the "Off" position when the engine is at rest.**

Should the state of the battery be continually bad, see that all its connections through the starter switch to the switchboard are tight and unbroken, and that no wire has a chafed covering, allowing leakage of current to the frame.

## The Electrolyte

When the battery arrives empty (as in the case of cars sent abroad) the first thing to do is to fill and charge it.

This means that a fluid is prepared composed of one part (by volume) of pure brimstone concentrated sulphuric acid with three parts (by volume) of distilled water. Mix these in a glazed earthenware vessel. Great care must be taken in this operation. Add the acid in very small quantities, almost drop by drop, and stir with a glass rod.

**Never add the water to the acid.** This is highly dangerous, and a serious explosion may result.

This mixing generates heat, and it is important that the electrolyte (as the mixture is called) should not be used in the battery before it has been allowed to cool. Pour the electrolyte into the cells of the



battery by means of a lead, glass or celluloid funnel, until it completely fills the cells to the top of the vent hole. Allow the battery to remain in this condition for 10 minutes or so, then put in more acid so that each cell is again filled to the same point with electrolyte. The electrolyte will have a specific gravity of 1.285 when fully charged. Batteries may be charged at almost any service station.

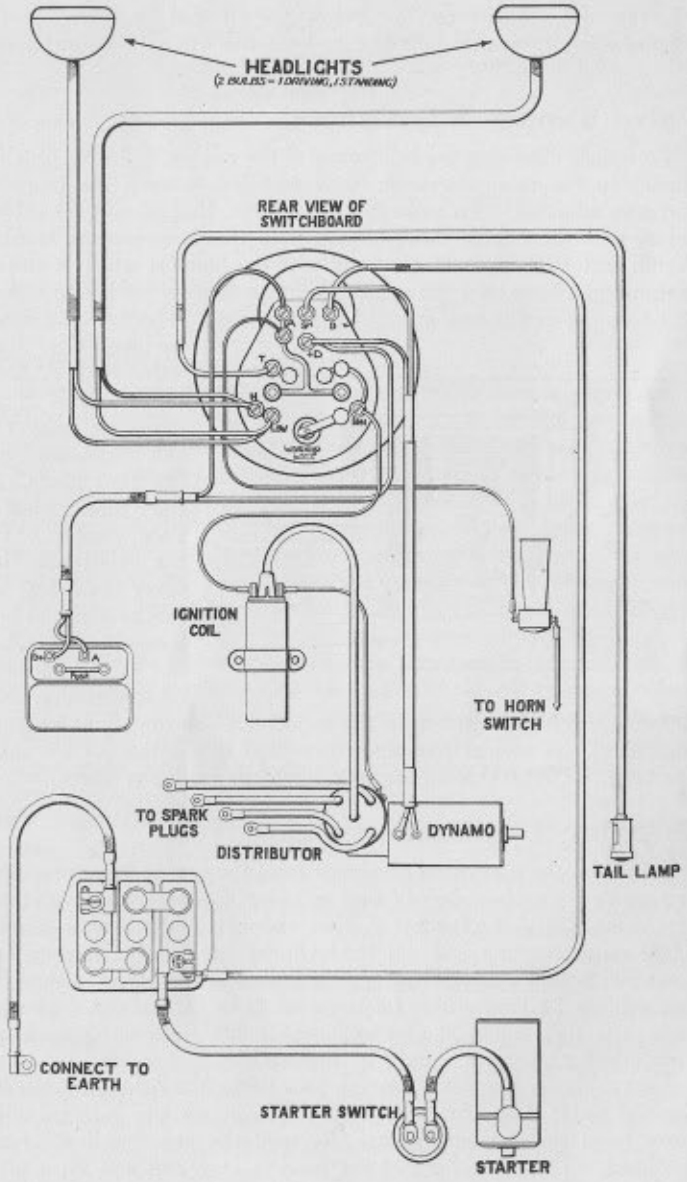

# Running Adjustments

THE adjustments set out below are all that the owner will find it necessary to make to keep the car in good running order.

## Valve Tappet Adjustment

To ensure obtaining the full power of the engine, and to maintain silence in the valve operation, it is essential to keep the tappets correctly adjusted. To make this adjustment, first remove the valve cover, turn the engine slowly round with the hand starting crank. Watch each valve open in turn and note the point at which it stops descending. Now turn the engine half a revolution further to make sure that the cam is well away from the tappet. There should now be between the valve stem A and tappet screw B a clearance equal to the thickness of the thin blade of the "tappet clearance gauge." If the clearance is other than this, it can be adjusted by loosening the lock-nut C and raising or lowering screw B, being careful to tighten up the lock-nut when the adjustment is completed. A special spanner is provided in the tool kit for this operation. Check this adjustment when the engine is warm.

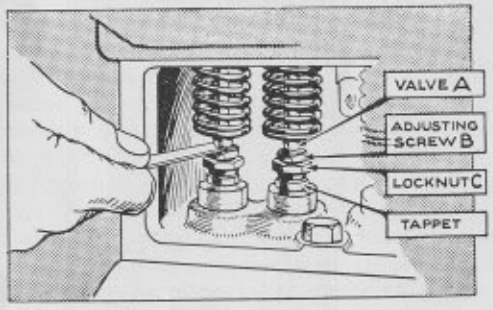


## Cleaning Combustion Chamber

To secure the maximum efficiency from the engine it is necessary to remove the carbon deposit that will have formed on the surfaces of the combustion chamber. This should be done after about 2,000 miles running. When the cylinder head is off it may be advisable to take this oportunity of grinding-in the valves, although this will need a longer time for the work to be carried out. In any case, it is recommended that after about 4,000 miles the work of grinding-in the valves should be undertaken.

First drain off the water through cock under the radiator. Detach the top water tube from the head. Disconnect the high tension wires from the sparking plugs. Remove the nuts holding down the head. Then take hold of the head at each end and lift it off.



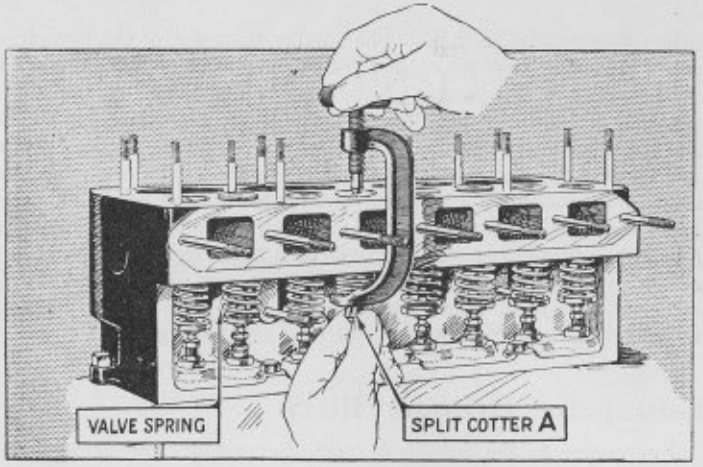


This should be fairly easy to do, without damaging the joint washer, which should, in the ordinary course, be in a condition to be replaced.

## Removing the Carbon

When the head has been removed the valves and tops of pistons will be exposed to view. All dirt or deposit should be removed by carefully scraping with a sharp tool. Before grinding-in the valves it will be necessary to remove the inlet pipe, and exhaust manifold, and carburetter, first turning off the petrol and uncoupling the pipe under the float chamber, then disconnecting the carburetter control, the air strangler wire, and the windscreen wiper tubing. The valve cover, with its cork washer, can be removed on undoing the two milled nuts. Each valve spring must be lifted by means of the special tool provided to allow the split cotter A to come out (see illustration); then remove the spring. The valve is now free to be rotated on its seat when the tappet screw has been lowered clear of the stem. After it is cleaned a little grinding compound should be smeared evenly on its face and the valve rotated backwards and forwards by means of a screwdriver, advancing it a step at short intervals until the pitting is removed. Lift each valve a little from its seating at the end of each step—this allows some of the grinding compound to enter between the two faces and facilitates the cutting action. Care should be taken that none of the compound enters the cylinders and the valve and seating should be wiped clean after the operation. Note that it is essential for each valve to be ground-in and refitted on its own seating, as indicated by the number on the valve head. The valves are numbered from 1 to 8, starting from the front. It is also desirable to clean the valve guides. This can be done by dipping the valve stem in petrol or paraffin and moving it up and down, and round, in the guide until the dirt is removed. Then the valve should be cleaned, and the stem smeared with graphite grease and re-inserted in the guide; the valve spring and cup being fitted up round it. The valve lifter is then used as before to compress the spring so that the

split cotter can be refitted. The smaller diameter of the complete cotter should be uppermost, and the cotter should be fitted down on to the collar at the bottom of the stem. The grease on the stem will help to hold it in position while the lifter screw is slackened, to allow the valve cup to come down over the cotter. It is easiest if the end valves are fitted first, working towards the centre ones. When refitting the manifolds ensure that the joints are good. The cylinder head joint washer should be replaced, copper side downward, with a little graphite grease smeared over each side, to make a good joint and to prevent it sticking when the head has next to be lifted. When replacing the head take care to tighten the nuts evenly. Don't forget, after replacing the head, to refill the radiator.

## Lifting the Cylinder Block

For access to the pistons (except the piston crowns), and the connecting rods, or for fitting a new tappet plunger or guide, or valve guide, it is necessary to lift the cylinder block. The three nuts on the distributor side are easily removed, also the three barrel nuts on the valve side can be removed without difficulty when the valve cover has been taken off. For access to the nut at the front of the cylinder block the dynamo and casing with the fan bracket and fan, must be lifted clear. First pull the ignition leads and the lead from the coil, from their sockets in the distributor cover. Disconnect the dynamo and the ignition control, and remove the fan belt. The casing is secured by three set screws and a nut. With the casing removed, the front cylinder block nut is accessible. For access to the rear nut of the block, it is advisable to lift the starter-motor and casing, from its mounting over the flywheel. This is done by removing the two set screws, and lifting the casing clear vertically off its positioning dowel. The cylinder block can be lifted when the lower hose connection has been removed. When refitting the starter-motor casing, the larger set screw is required at the nearside of the casing. There is no joint washer between this casing and the crankcase, but paper joint washers are used between the cylinder block and the crankcase, also under the dynamo casing. These joints must be oil-tight. When refitting the cylinder block it is necessary to use sleeves on the pistons to compress the rings. These piston ring sleeves are among the extra tools obtainable from the Service Department of the Austin Motor Co., Ltd. It will be necessary to retime the ignition after re-assembling.

## Adjusting the Brakes

Both the hand brake and the foot brake operate on all four wheels. They require adjusting when the hand lever can be pulled right back to the full travel on the rack, and when the pedal can be pushed nearly to the floor-board without either brake holding the wheels. The car should never be taken out when in this condition, but should be attended to at once.



To adjust the foot brake : Under the car and approximately under the foot controls is a wing nut (C). This must be screwed towards the front of the engine until the brakes go full on when the pedal is depressed about 2in. When the pedal is up, the brake shoes should not rub the wheel drums in which they operate.

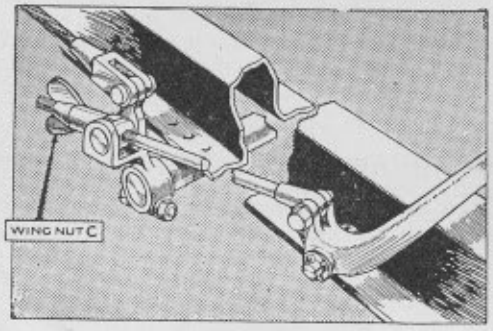


For adjusting the rear brakes, which may be necessary after re-lining the shoes, an individual adjustment for each of the rear brake cables is provided. A screwed end, to which the cable is attached, screws into the front fork-end, which secures the cable to the compensating tube lever. By removing the fork-end from the lever (a pin, secured by a split-pin, holds it) the fork can be screwed further on or off the screwed cable end to effect the adjustment. The cable must not be twisted while this is being done. To test whether both brakes engage equally at the same time, jack-up the back axle, and with the brake pedal pressed down, turn each wheel by hand to judge the braking effect.

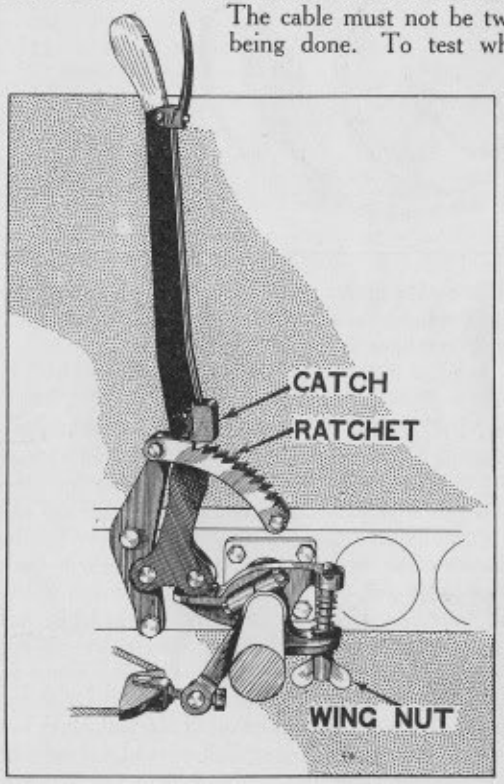


Having done this the hand brake lever should be adjusted. This is done from under the car, by hand. A wing nut is provided by means of which the slack between the hand brake lever and the brake gear is taken up.

The hand brake lever must be be pushed forward to its limit, that is the brake must be

right off. Then turn the wing nut clockwise until the hand brake lever will only move freely one notch in the rack, without moving the brake mechanism.

If this short movement is made without beginning to operate the brakes, it indicates that the brake shoes will not rub against the drums when the hand brake lever is in the "off" position ; and that the adjustment has been properly made.

## Re-lining the Brakes

To re-line the brakes it is necessary first to remove the wheel, and then the brake drum, by unscrewing the three screwdriver

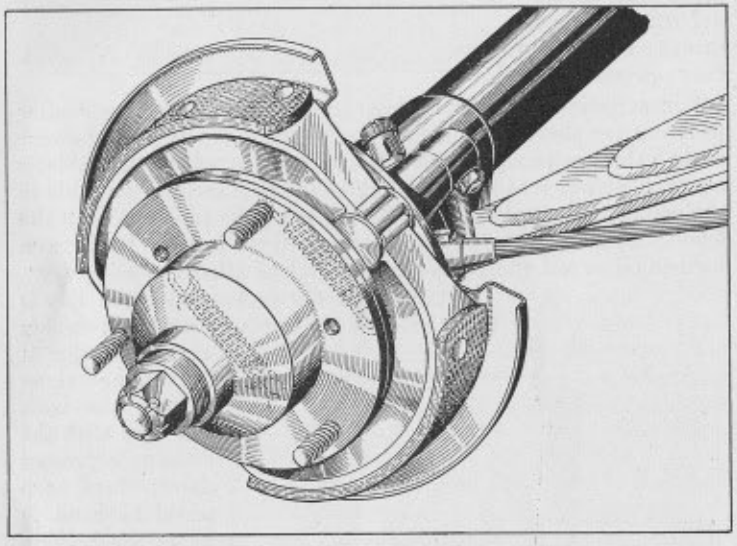

screws which secure it to the hub ; and, before the shoes can be removed for re-lining, the hub and wheel bearing must be extracted. For this a special hub extractor is supplied in the tool kit.

## Rear Brakes

For the rear wheel brakes (see illustration on page 30) remove the axle shaft nut, having first taken out the split pin, and extract the outer portion of the hub by screwing the extractor on the screwed end, and turning the extractor bolt which bears on the end of the axle shaft. Remove the key from its keyway in the axle shaft. Next remove the bearing nut, having knocked back the tang of the washer locking it, and prise the inner portion of the hub or felt housing together with felt packing and bearing, off the end of the axle casing. Do not damage the paper washer between the hub and the felt housing faces, as it is important to make a good joint on reassembling, to prevent the hub lubricant penetrating to the brake. If this inner portion of the hub does not come off the axle casing easily, the outer half should be refitted



as closely as possible, using the wheel nuts to draw the two halves together. Then use the hub extractor a second time, and so remove the hub together with bearing and packing. The brake shoes can now be pulled off the cam and pivot pin and the springs unhooked. The old linings can then be detached by punching or drilling out the rivets.

The brake linings should be clamped to the shoes while the riveting is in progress, as it is essential that they should bed down on the shoes over their whole area. When the linings have been rivetted in position, bevel off at each end for about $\frac{1}{4}$ inch with a coarse file.

## Reassembling

To reassemble, replace the shoes with their springs on the cam and pivot pin. Replace the inner portion of the hub or felt housing with the bearing and packing on the axle casing end, and push up home by tightening the bearing nut, which must be locked by the locking washer in the same way as before dismantling. Replace the paper joint washer on the felt housing face, insert the key in the shaft, push the hub over the axle shaft, on the key, and draw it up to the felt housing by the wheel nuts on their studs. When the joint faces of the hub and the felt housing are together replace the axle nut and tighten securely up to the hub boss. *Remember to insert the split pin through the nut.* Then remove the wheel nuts from the hub, fit the brake drum, and insert and tighten the three screwdriver screws.

## Front Brakes

For the front brakes (see illustration on page 30) the operation is somewhat similar. Having removed the wheel, and the brake drum, secured by the three screws, remove the hub cap, and screw on the extractor in its place. Before proceeding further, remove the plug (A) from the hub, or unscrew it for about three turns ; otherwise it will foul the outer hub bearing when the hub is being extracted. Draw off the outer portion of the hub. The axle nut and split pin will now be accessible for removal. Now replace the outer portion of the hub and pull it up to its original position by the wheel nuts, as in the case of the rear wheel. By means of the extractor draw off the hub with its bearing and packing. The brake shoes are left clear for removal. On reassembling remember to fit a new split pin through the axle and nut ; there is a hole in the end of the hub through which the pin can be inserted.

It is always necessary to re-line all four brake shoes on the one axle at the same time, and after the re-lining it may be necessary to slack off the brake adjustment before the brake drum can be replaced.

After re-lining the brakes make sure that the hubs contain sufficient lubricant, and re-adjust the brakes if necessary.

## Tracking Adjustment

One of the causes of premature tyre wear is the front wheels being out of track. The wheels, if they are correctly tracking should not be parallel, but should be $\frac{1}{8}$ in. closer between the rims in front of the axle than they are behind. This difference, or "toe-in" as it is called, allows for working clearances of the steering connections, and any slight spring of the parts, so that when the car is running the wheels are as near parallel as possible. If on checking this difference, it is greater or smaller than $\frac{1}{8}$ in. the tracking should be adjusted. This is not difficult to effect. It is necessary to remove the cross tube lever, on the near side, from the swivel axle. It is secured by a nut on the front of the swivel axle, under which there is a spring washer. With this done, the steering cross tube is freed at the near side for the adjustment. On the clamping bolt of the steering arm jaw being slackened, the jaw can be screwed further on, or off, the cross tube, for so many complete turns as may be necessary. This movement will enable the correct adjustment to be attained; then the clamping bolt is re-tightened. On refitting the cross tube lever to the axle, tighten the nut securely, with the spring washer under it. This, as well as the steering adjustment described below, is one of the adjustments which it is advisable to leave to the Austin agent to effect, who is properly equipped for the work.

## Adjustment of Steering

If after continual use slackness should be felt in the steering, two adjustments are available :—To take up the play in the column, loosen the nut which tightens the bracket supporting the steering outer column to the instrument board, unscrew locking peg (A) and

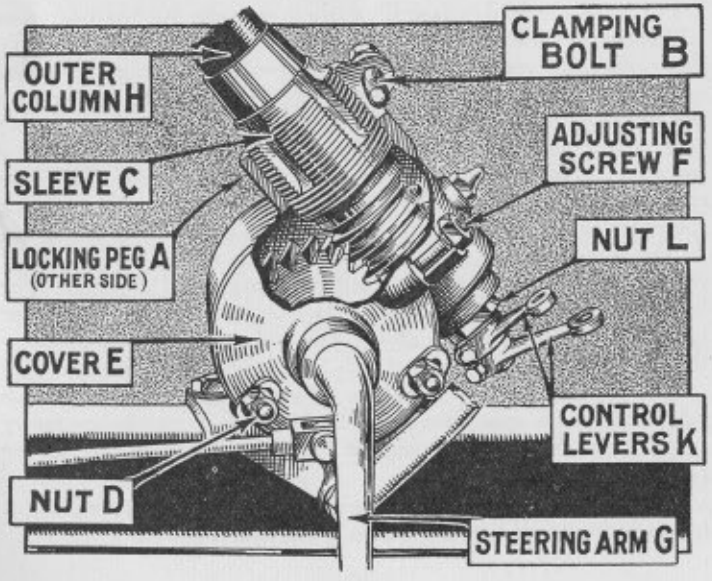




clamping bolt (B) then turn the sleeve (C) with the special spanner provided for the purpose, until the play has been removed. Do not screw the sleeve in too tight or the steering will then become stiff. Having adjusted the sleeve correctly, screw in the locking peg so that it enters one of the slots of the sleeve, tighten up the clamping bolt, and the supporting bracket to the instrument board.

To take up the clearance between the worm and worm wheel, due to wear, remove the locking plates and slacken the three nuts (D) holding the cover (E) to the worm casing, then turn adjusting nut (F) so as to slightly draw the cover in the direction of the worm. Care must be taken that the worm wheel is not brought too tightly into mesh with the worm or it will make the steering exceedingly hard and stiff. Having made the adjustment be sure and tighten up the three nuts (D) and lock them with the locking plates.

Should it be desirable to remove the steering worm wheel from the casing, it is only necessary to slacken the adjusting nut (F) and remove the three nuts (D) when the cover (E) can be withdrawn together with the worm wheel and steering arm. The steering column (H) with control rods can be withdrawn by first removing control levers (K), and nut (L), then slackening locking peg (A), and clamping bolt (B), and unscrewing the sleeve (C). These adjustments, again, should be left to an Austin agent to effect.

## Adjusting Austin Front Shock Absorbers

The shock absorber is set to a certain initial tension before it leaves the factory, and no change in this adjustment should be necessary for a very considerable time.

Re-adjustment may only become necessary after several thousand miles of car travel, and should be made only when the spring movement seems too free. It should be noted that, normally, the full benefit of the shock absorbers will not be felt when the car is travelling at low speeds, as under these conditions the spring movement is very limited, but, as the speed increases their effect becomes more pronounced, especially over bad roads when the spring action is most severe. Testing should, therefore, be carried out at comparatively high average touring speeds and adjustment made to suit these conditions.

The frictional resistance required to effectively control the action of the springs is comparatively small, and care should be taken not to alter the pressure, when adjusting, more than is absolutely necessary in order to obtain the desired results.

For fast sporting cars and for road and track racing, a considerable increase in pressure may, of course, be required.

When adjustment does become necessary, carefully note the riding qualities of the car, and if the spring action seems too retarded or stiff, reduce the frictional resistance of the shock absorbers by turning the centre adjusting nut to the left, or counter-clockwise, after slackening the lock nut. If the spring action seems too free, increase the frictional resistance by turning the adjusting nut to the right, or clockwise. After adjusting, tighten the lock-nut.

Careful adjustment in this manner will produce an ideal condition. The spring will still have the required amount of flexibility for easy riding, but spring vibration will be reduced to a minimum and violent rebound effectively eliminated.

The rear Austin shock absorbers do not require adjustment.

## Cleaning the Shock Absorbers

Periodically—especially in wet weather when much mud is thrown on to them—the large end of the shock absorbers should be taken apart, by withdrawing the centre bolt, and thoroughly cleansed. The centre pin and washers should then be slightly smeared with grease.

If this precaution is not adopted, the shock absorbers are liable to become tight—when an excessive load is thrown on the pins and bushes at the end of the arms, which will cause rapid wear. In addition, great strain is imposed on the bracket holding the shock absorber to the frame.

## Clutch Slip

Some drivers are inclined to use the clutch instead of changing down to a lower gear, particularly when they are almost at the top of a hill and it is only necessary to change down for a few yards. Foot pressure is applied to the clutch to create a certain amount of slip (see page 9). This highly polishes the frictional surfaces and will eventually be the cause of persistent slip ; finally in addition to burning out the fabric rings, probably also distorting the centre plate and making renewal of this essential.

Sometimes clutch slip is due to oil penetrating to the clutch as a result of overfilling the gearbox. If the inspection plate over the clutch casing is removed, petrol can be syringed on the clutch plate to wash off the oil, so that the clutch regains its frictional characteristics.

When injecting the petrol have the engine turned so that the plate is properly washed and the petrol and oil are given an opportunity to drain away, also push the clutch out and let it in by the pedal so that the petrol is given a washing action. Do not replace the inspection plate, until the oil and petrol have had sufficient time to evaporate, or be drawn off through a hole in the casing under the flywheel. See that this hole is clear.

After this operation it is advisable to lubricate the declutching levers at their pivotting points and the clutch withdrawal collar (page 27) as the lubricant in these members may have been removed by the petrol.

There is no adjustment necessary for the clutch.

## Fan Adjustment

Release the clamping pin nut on the fan bracket and then turn the spindle, which is in the form of a crank, until the necessary tension is obtained in the fan belt.



# Care of the Hood

## Lowering the Hood.

To lower the hood, first release it from the pillars of the windscreen, push the side screens inwards so that the rubber buffers fixed near the top of the division on the side screens clear the iron framework of the hood.



Now push the hood straight up and back from the front and break the joint of the iron framework, see illustration.

The picture shows very clearly the commencement of the "concertina" movement which begins the actual lowering of the hood.

The hood will then collapse towards the back of the car. Pull the folds out until they lie in one big fold over the back of the car, see below ; secure the two rear window fasteners, on to the studs on the back of the body, and secure the hood frame with the clip on either side. Ensure that the folded frame rests in the support near the forward end of the lowered upright that pivots on the body.

Now fold the material back carefully, seeing that the edges are evenly placed, turn them in, either side or under, and put the cover in position over all.

Secure the cover by the straps, one each side, and the two fasteners on the back of the body.

## Raising the Hood

To raise the hood, remove the cover, release the clip, and unfold the hood material. Lift the top hood stick vertically, holding the metal side-strip of the hood frame near the hinge. If the front hood stick is then pushed forward and the metal strips are pulled back to straighten the hinge, the whole hood can be dropped forward and secured in position to the windscreen.

## Care of the Hood

Care should be taken in folding down the hood to see that the original folds are used. Should the car have been used in wet weather leave the hood up to dry. Never fold it when wet.

## The Side Curtains.

The side curtains are secured against movement or rattle by set screws. The pegs at the bottom of the curtains fit into holes in the aluminium rail on the top of the bodywork, and these pegs are firmly held by screws. Before the sidescreens can be removed, these screws must be slackened with a coin or screwdriver, and also the nut on the inner side of the main hood stick fulcrum.





# CARE of the BODYWORK

FOR the car to look well and keep its beauty and smart appearance, the body must be given its share of attention ; it must not be neglected.

## Washing

The cellulose (or fabric) finish of the car is easily cleaned and polished. In summer weather when the car is only dusty the dust can be lightly flicked off without water and there is no risk of damaging the finish. When the car is muddy, wash off well with clean running water. Remove any grease or tar splashes with petrol. Don't use the same sponge and cleaning cloths for the chassis and springs and other greasy parts as are used for the coachwork.

## Polishing

Dry off and then polish with one of the special polishes now marketed. (Polish is not necessary for the fabric bodies except at infrequent intervals. Then an ordinary wax polish can be used, only sparingly applied). Such preparations impart a brilliant surface and preserve and beautify the body. On no account should metal polishes be used, as are sometimes advertised for cellulose. It has been found that the more the surface of the cellulose finish is rubbed by the polishing cloth, the smoother and more lasting is the lustre imparted.

Door locks, hinges and other small working parts should be given a drop or two of oil occasionally.

---

# DON'T !

Don't, *please* don't—
Don't leave the car in gear with the handbrake off.
Don't make a fast run with the radiator muff down.
Don't fill the radiator with cold water when the engine is hot.
Don't try to turn the engine without first pushing the starting-handle in to engage fully with the starting nut.
Don't be cruel to the starter if the engine will not fire.
Don't put an excessive quantity of lubricant in the gear box.
Don't pour oil into the engine with the strainer removed.
Don't forget the ignition switch when starting up.
Don't leave the ignition switched on when the engine is not running.
Don't coast with the engine running and the clutch held out.
Don't run the engine in a closed garage. (The exhaust gases are highly toxic and a very small amount in a restricted atmosphere will produce grave, if not fatal, results).

# Storing the Car

Should the car be laid up in the garage for long periods, the fuel and water should be drained off and the batteries removed, and weight taken off the tyres.

# The Tyres

## Tyre Pressure

The minimum pressure at which both front and back tyres should be inflated is 20 lbs.

Should, due to wear or other causes, the steering at any time develop a tendency to wander or show signs of wobble, this pressure should be increased. It is important that both front tyres should be kept at the same pressure. In any event there is no reason why the pressure should not be more than the minimum figure given, as some drivers prefer their tyres harder than do others.

As tyres form such a large item in the running costs of a car it is advisable to give them periodical examination and attention.

A cursory glance should be given daily to see that none of the tyres is unduly slack, and a weekly test with a suitable gauge should be made to verify the pressures. Occasionally examine the tyre treads for cuts; bad cuts should be vulcanized.

## Tyre Wear

Because of the turning-in of the wheels towards each other at their lowest point, it has been found that the front side tyre wears at its outer edge. The camber of the road tilts the car towards the left, and the tyres are distorted. It is in the action of recovering their correct shape, immediately after contact with the road, that they suffer abrasion, made more damaging because the gritty substances now used on tarmac roads accumulate on the near side and the wheel is running in this grit for most of the time it is on the road. So change your front wheels over and thus equalize the wear between the tyres. When both tyres have become worn on the outside edge, change the back wheels with the front wheels. Subsequently the tyres can be turned round, bringing the least worn edge to the outside. If the front tyres should show premature wear at any time suspect the tracking of the front wheels. Have it checked, to see if it is correct, and, if necessary, adjusted (see page 46).



# Tools and Accessories Supplied With The Car.

- $\frac{1}{4}$ in. and $\frac{3}{16}$ in. box spanner.
- $\frac{5}{16}$ in. × $\frac{3}{8}$ in. box spanner.
- $\frac{5}{8}$ in. and $\frac{3}{4}$ in. box spanner.
- $\frac{3}{16}$ in. and $\frac{1}{4}$ in. double open-end spanner.
- $\frac{5}{16}$ in. and $\frac{3}{8}$ in. double open-end spanner.
- $\frac{7}{16}$ in. and $\frac{1}{2}$ in. double open-end spanner.
- Adjustable spanner, 4 in.
- Carburetter jet key.
- Hub-cap and steering column sleeve spanner.
- Ignition spanner.
- Tappet adjusting spanner.
- Spanner for monobloc nuts.
- Tool wrap.
- Sparking-plug box spanner and tommy bar.
- Brace for detachable wheels.
- Tyre lever.
- Tyre pump.
- Lifting jack, with handle.
- Screwdriver.
- Sparking plug and tappet clearance gauge.
- Grease gun with adaptor.
- Valve-spring lifter.
- Combination pliers.
- Hub extractor and screw.

A spare cylinder-head joint washer is also supplied.

Extra with supercharged sports model: Rear axle oiling adapter, valve grinding tool, special valve lifter, induction pipe flange spanner.

Extra with unsupercharged sports model: valve grinding tool, special valve lifter.


# THE AUSTIN MAGAZINE

*A high-class monthly motor journal of wide appeal and special interest to the Austin owner*

**SUBSCRIPTION - 7/6 per annum** (post free).
**4**d. MONTHLY———From any Bookstall or Newsagent.

*Send your Subscription NOW—*

**"THE AUSTIN MAGAZINE,"**
*SUBSCRIPTION DEPARTMENT,*
**LONGBRIDGE, Birmingham.**

# AUSTIN SEVEN EQUIPMENT

**THE Austin Motor Co., Ltd., accept no liability under the terms of their Warranty for Tyres, Speedometers, or the Electrical Equipment, or other goods, including Coachwork, not of their own Manufacture.**

**All claims relating to any of these parts or fittings or orders for repairs to them, should be addressed to their manufacturers.**

**For owners' information we give below the names and addresses of the manufacturers, or suppliers of the equipment fitted on the Austin Seven.**

## IMPORTANT

**When claims under guarantee are being made, it is absolutely necessary to quote the type and number of the car, and the commissioning date.**

### Electrical and Ignition Equipment, Lamps and Batteries

| | |
|---|---|
| "Lucas" and "C.A.V." | Joseph Lucas, Ltd., Great Hampton Street, Birmingham and Dordrecht Road, Acton Vale, London, W.3. |

### Windscreen Wiper

| | |
|---|---|
| "Trico" | A. Rist, Ltd., Waveney Works, Lowestoft. |
| "Folberth" | C. G. Vokes & Co., Ltd., 95-97, Lower Richmond Road, Putney, London, S.W.15 |

### Grease Gun

| | |
|---|---|
| "Enots" | Benton and Stone, Ltd., Bracebridge Street, Birmingham |

### Speedometer

| | |
|---|---|
| "Smith" | S. Smith and Sons (M.A.), Ltd., Cricklewood Works, London, N.W.2. |

### Bodies and Fittings

| | |
|---|---|
| "Gordon England" | Gordon England, Ltd., Palace of Industry, Wembley. |
| "Mulliner" | Mulliners, Ltd., Bordesley Green Road, Birmingham. |
| Startin" | Thomas Startin, Junr., 71, Aston North Road, Birmingham. |



### Tyres and Tubes

| | |
|---|---|
| "Dunlop" | Dunlop Rubber Co., Ltd., Fort Dunlop Erdington, Birmingham. |

### Carburetter

| | |
|---|---|
| "Zenith" | Zenith Carburetter Co., Ltd., 40-42, Newman Street, London, W.1. |

### Horns

| | |
|---|---|
| "A.R." | A. Rist, Ltd., Waveney Works, Lowestoft. |
| "Benjamin" | Benjamin Electric, Ltd., Brantwood Works, Tariff Road, Tottenham, London, N.17. |

### Lifting Jacks

| | |
|---|---|
| "Midas" | Lake and Elliott, Ltd., Albion Works, Braintree, Essex. |
| "Shelley" | R. T. Shelley, Ltd., Aston Brook Street, Birmingham. |

---

*Owner's Name*

*Address*

*Car No.*

*Registration No.*

*Driving Licence No.*

*Insurance Policy No.*

# "LUCAS" SERVICE DEPOTS

BELFAST, 3-5, Calvin Street, Mountpottinger.
Telegrams : "Servdep," Belfast. Telephone : Belfast 7017.

BIRMINGHAM, Great Hampton Street.
Telegrams : "Lucas, Birmingham." Telephone : Central 8401 (10 lines)

BRISTOL, 345, Bath Road.
Telegrams : "Kingly, Bristol." Telephone : Bristol 8400 (4 lines)

CARDIFF, 54a, Penarth Road.
Telegrams : "Lucas, Cardiff." Telephone : Cardiff 4603 (4 lines)

COVENTRY, Priory Street.
Telegrams : "Lucas, Coventry." Telephone : Coventry 3068 and 3841.

DUBLIN, 41, Middle Abbey Street.
Telegrams : "Autolite, Dublin." Telephone : Dublin 653.

GLASGOW, 227-229, St. George's Road.
Telegrams : "Lucas, Glasgow." Telephone : Douglas 3075 (5 lines)

LEEDS, 64, Roseville Road.
Telegrams : "Luserdep, Leeds." Telephone : Leeds 28591 (5 lines)

LIVERPOOL, 450-456, Edge Lane.
Telegrams : "Luserv, Liverpool." Telephone : Old Swan 1408 (3 lines)

LONDON, Dordrecht Road, Acton Vale, W.3.
Telegrams : "Dynomagna, Act, London.
Telephone : Riverside 3160 (10 lines)

LONDON, 759, High Road, Leyton, E.10.
Telegrams : "Luserdep, Walt, London."
Telephone : Walthamstow 2161 (3 lines).

LONDON, 155, Merton Road, Wandsworth, S.W.18.
Telegrams : "Luserv, Wands, London."
Telephone : Putney 5131 (4 lines) and 5501.

MANCHESTER, Talbot Road, Stretford.
Telegrams : "Lucas, Stretford." Telephone : Longford 1101 (5 lines)

NEWCASTLE-ON-TYNE, 64-66, St. Mary's Place.
Telegrams : "Motolite, Newcastle-on-Tyne."
Telephone : Central : 3571 (3 lines).